10746831
900540.R120

INDEX

Clamping head Top40 D=12,00mm

Technical data

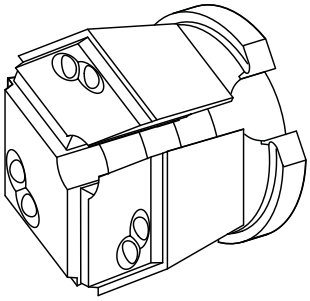

Clamping device size	SK40
manufacturer product line	TOPlus chuck
Clamping type	grooved
Nominal diameter (mm)	12 Millimeter
Clamping method	External clamping
manufacturer product line	Hainbuch

No 3-side view is currently available for this product

Documents

No downloads available for this product