Guide bush T223 Ø=14,00

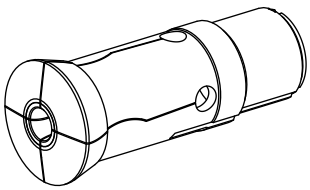

Technical data

Clamping device size	T223 deadlength
manufacturer product line	
Clamping type	with carbide insert
Nominal diameter (mm)	14 Millimeter
Clamping method	External clamping
Collet design	programmable (Axfix)
Collet version	S-slot
manufacturer product line	Schlenker

Note

with bushing

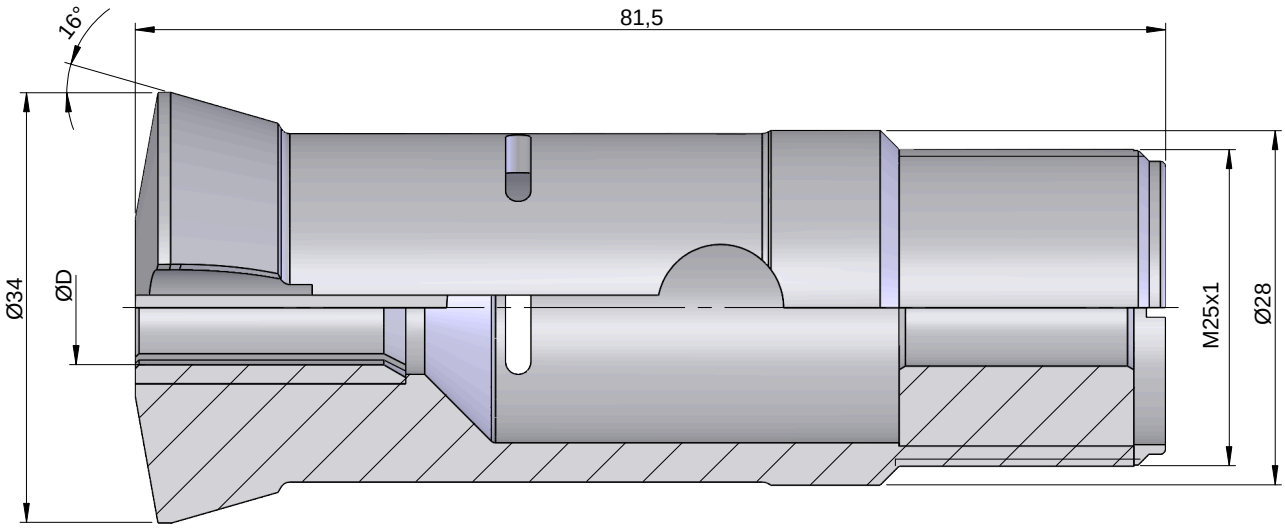
16°
81,5
Ø34
ØD
M25x1
Ø28

Documents

No downloads available for this product