Guide bush T229 Ø=10,00

Technical data

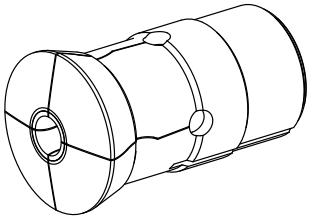

Clamping device size	T229
manufacturer product line	
Clamping type	with carbide insert
Nominal diameter (mm)	10 Millimeter
Clamping method	External clamping
Collet design	adjustable
Collet version	S-slot
manufacturer product line	Schlenker

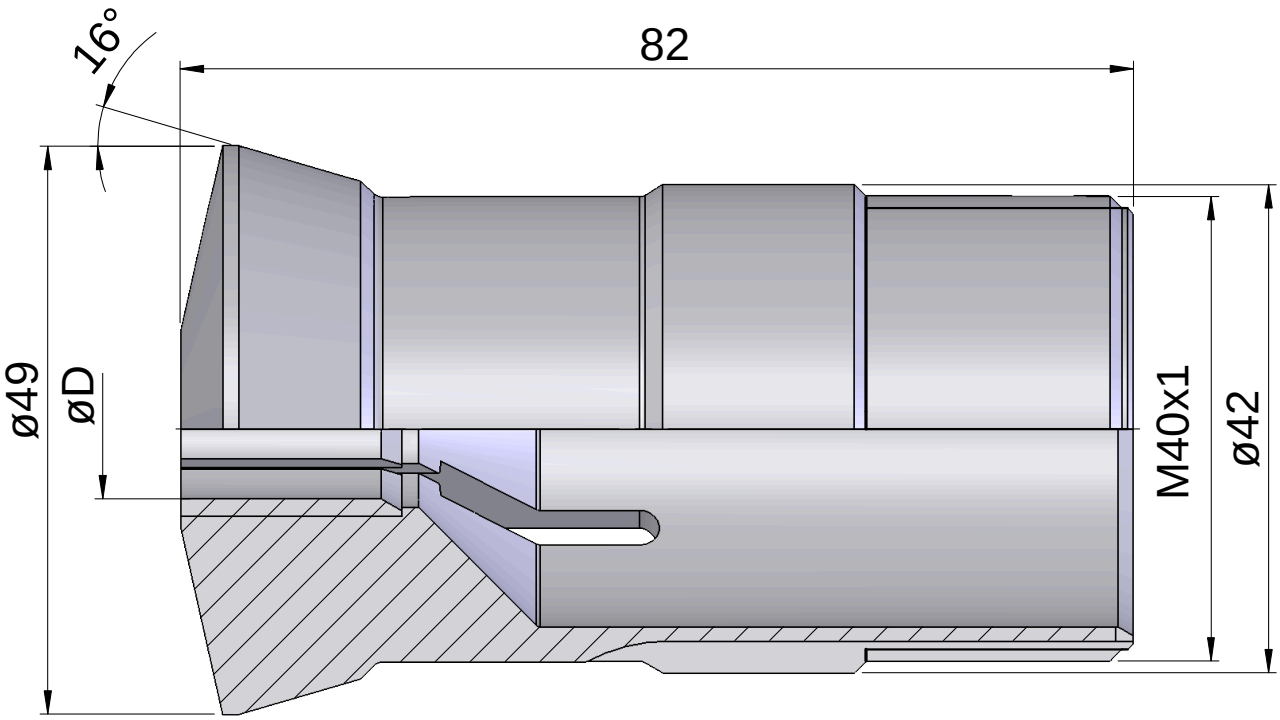

Documents

No downloads available for this product