INDEX

# Screw M8x1-RH 15,5LG 1000.602.15,5R

## Technical data

There are currently no additional technical features stored for this product

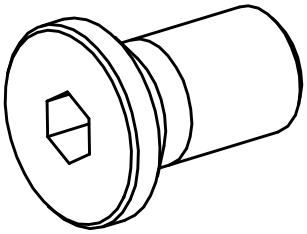

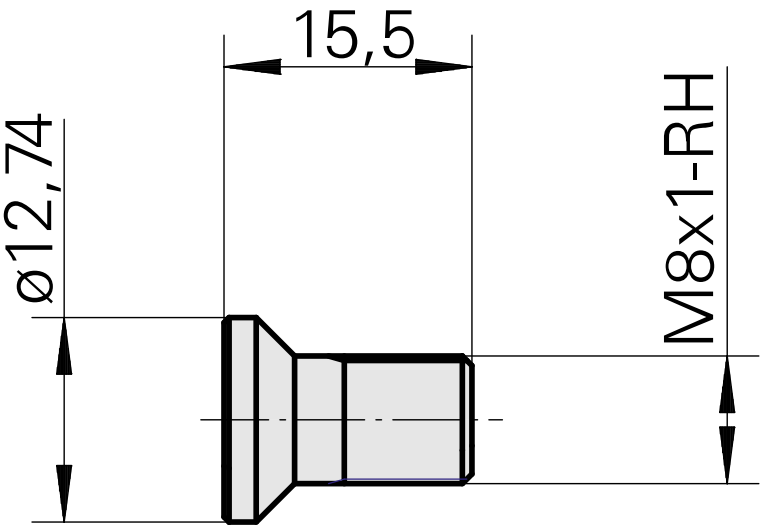


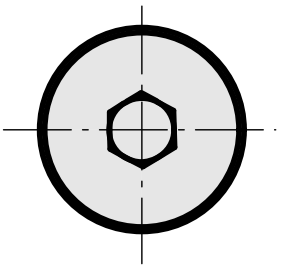

## Documents

No downloads available for this product