Housing

Technical data

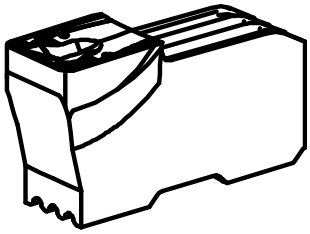

TH accessories category	Cutting tools
Mounting	Löcher System

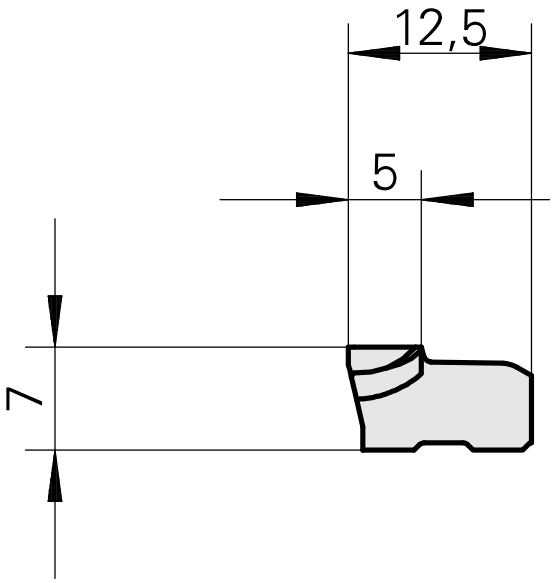



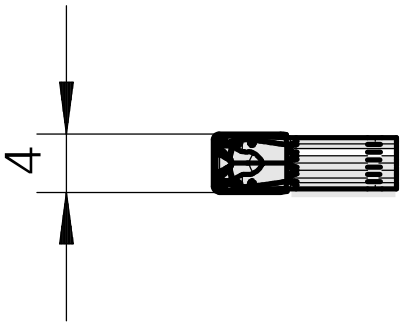

Documents

No downloads available for this product