# Portapunte Espansione idraulica D10

## Technical data

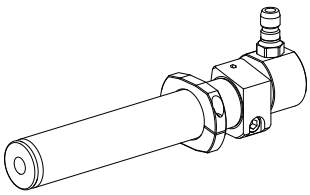

| | |
|---|---|
| **Drive** | not live |
| **Fixation MS** | Clamping ring D28.5 |
| **Cooling** | internal |
| **Pressure** | 80 bar |
| **Mounting** | Hydraulic expansion chuck D10 |
| **X [mm]** | – |
| **Y [mm]** | – |
| **Z [mm]** | – |
| **INDEX TRAUB products** | MS22-6 • MS22-8 • MS16-6 • MS24-6 • MS16-6 Plus |

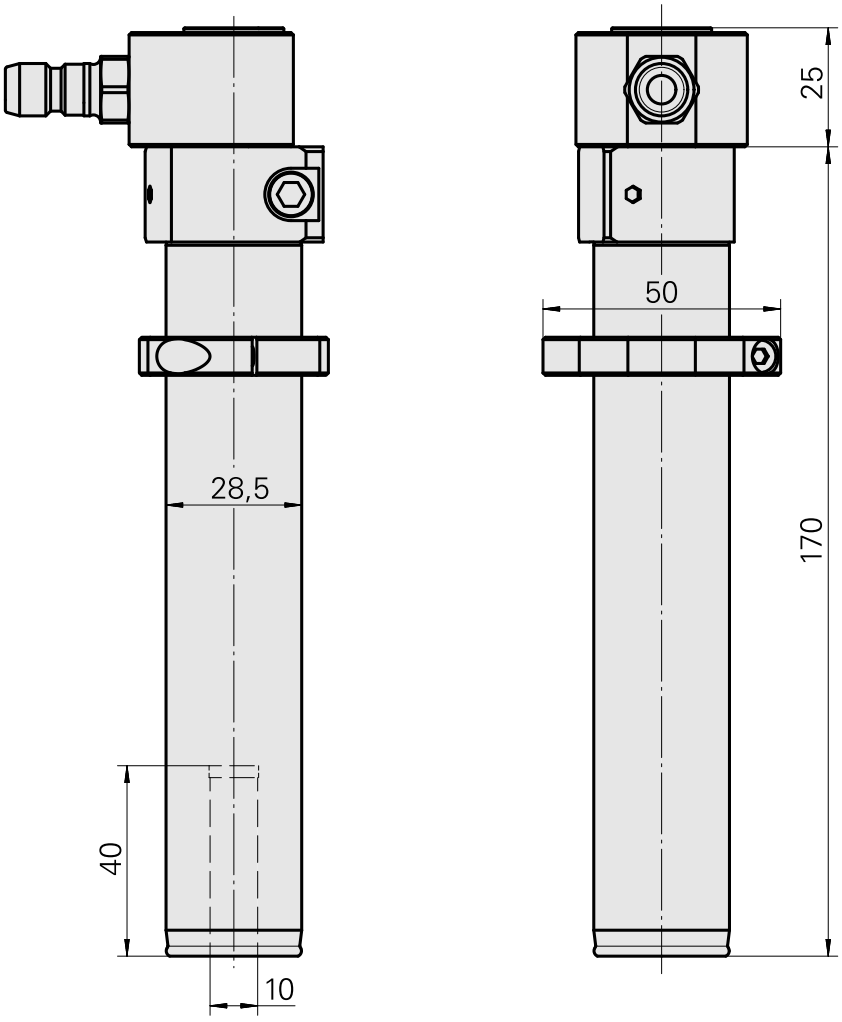

## Documents

**Product notes**

DE (pdf)

EN (pdf)

FR (pdf)

## Accessories

### Optional accessories

**Other accessories**

QUICK COUPLING SP-006-0-WR513-11-2 Serie LP

Product ID : 10837142
Previous product ID : 474940.0112