Bar stop VDI 30, live

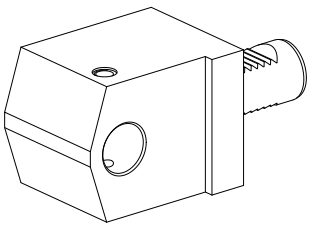

Technical data

Shank VDI	VDI 30
Drive	not live
Fixation VDI	none
reversable 180°	yes
Data carrier	check tool station bore
X [mm]	70 (2.76")
Y [mm]	–
Z [mm]	30 (1.18)
INDEX TRAUB products	G220.3 • TNC42/65 • TNX220.3 • TNX200.3 • G200.3 • G320.3 compact

Note

Bar stop D58 10900227 or D85 10452051 must be ordered separately.

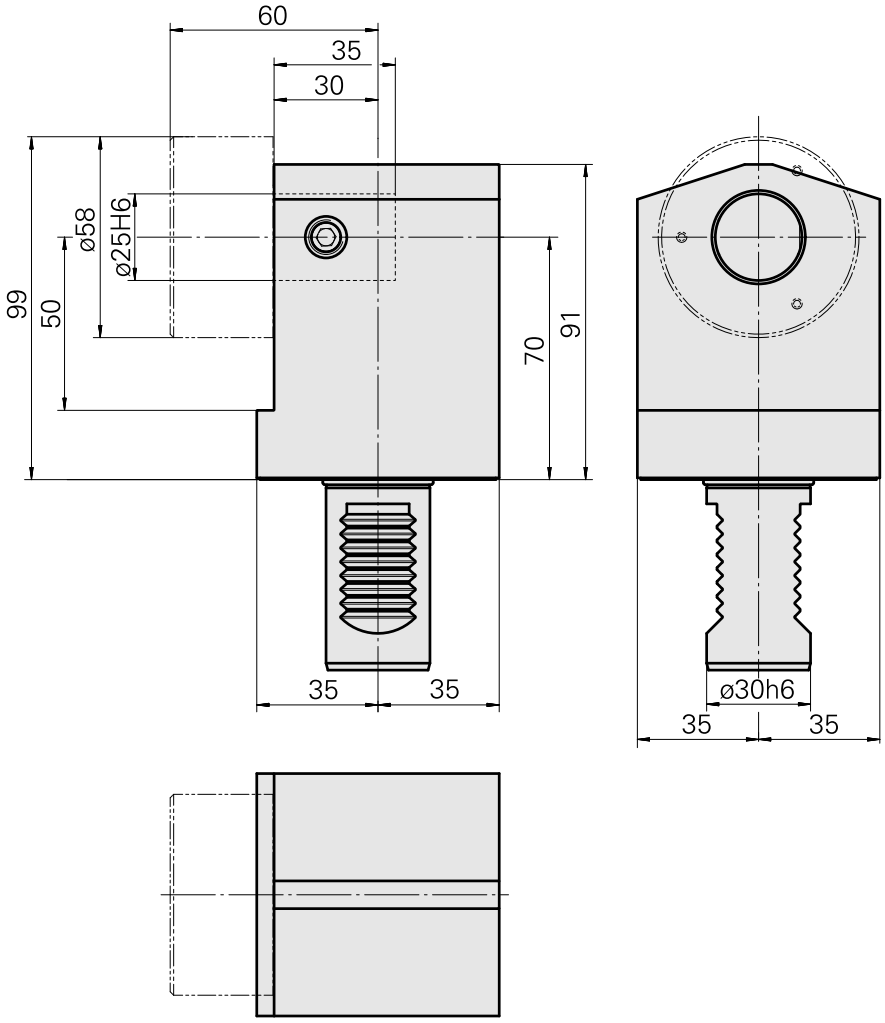
60
35
30
ø58
ø25H6
99
50
70
91
35
35
ø30h6
35
35

Documents

Product notes

DE (pdf)

EN (pdf)

FR (pdf)

Accessories

Required for operation

Bar stop D58 (2.28 "), live

Product ID : 10900227
Previous product ID : W9990159

Drive	Mounting	X [mm]	Y [mm]
not live	D58	–	–

Z [mm]	INDEX TRAUB products
30 (1.18)	C42/65 • G160 • ABC • B400 • C100 • C200 • G200 • G200.2 • G220 • TNX65/42 • TNA400.2 • G420 • B500 • TNA500.2 • G400.2 • G500 • G520 • ABC.2 • G300.2 • G320.2 • G200.3 • G220.3 • TNX200.3 • TNX220.3 • B400.3 • B500.3 • TNA400.3 • TNA500.3

Bar stop D85 (3.35 "), live

Product ID : 10452051
Previous product ID : W9990160

Drive	Mounting	X [mm]	Y [mm]
not live	D85	–	–

Z [mm]	INDEX TRAUB products
30 (1.18)	C42/65 • G160 • ABC • B400 • C100 • C200 • G200 • G200.2 • G220 • G250 • TNX65/42 • TNA400.2 • B500 • TNA500.2 • G420 • G400.2 • G500 • G520 • ABC.2 • G300.2 • G320.2 • B400.3 • B500.3 • TNA400.3 • TNA500.3