Grooving tool holder MS16 grooving slide, X.2

Technical data

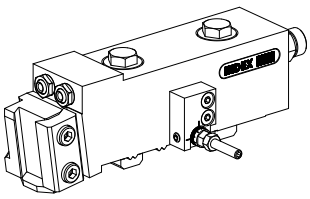

Slide system MS	MS16 grooving slide
Drive	not live
Fixation MS	W serration
Cooling	external
Pressure	80 bar
Direction	left-handed run
Mounting	Forming tool AWN 28
X [mm]	106 (4.17")
Y [mm]	–
Z [mm]	25 (0.98)
INDEX TRAUB products	MS16-6 • MS16-6 Plus

Note

Can be used on INDEX MS16-6 in position x.2 only!

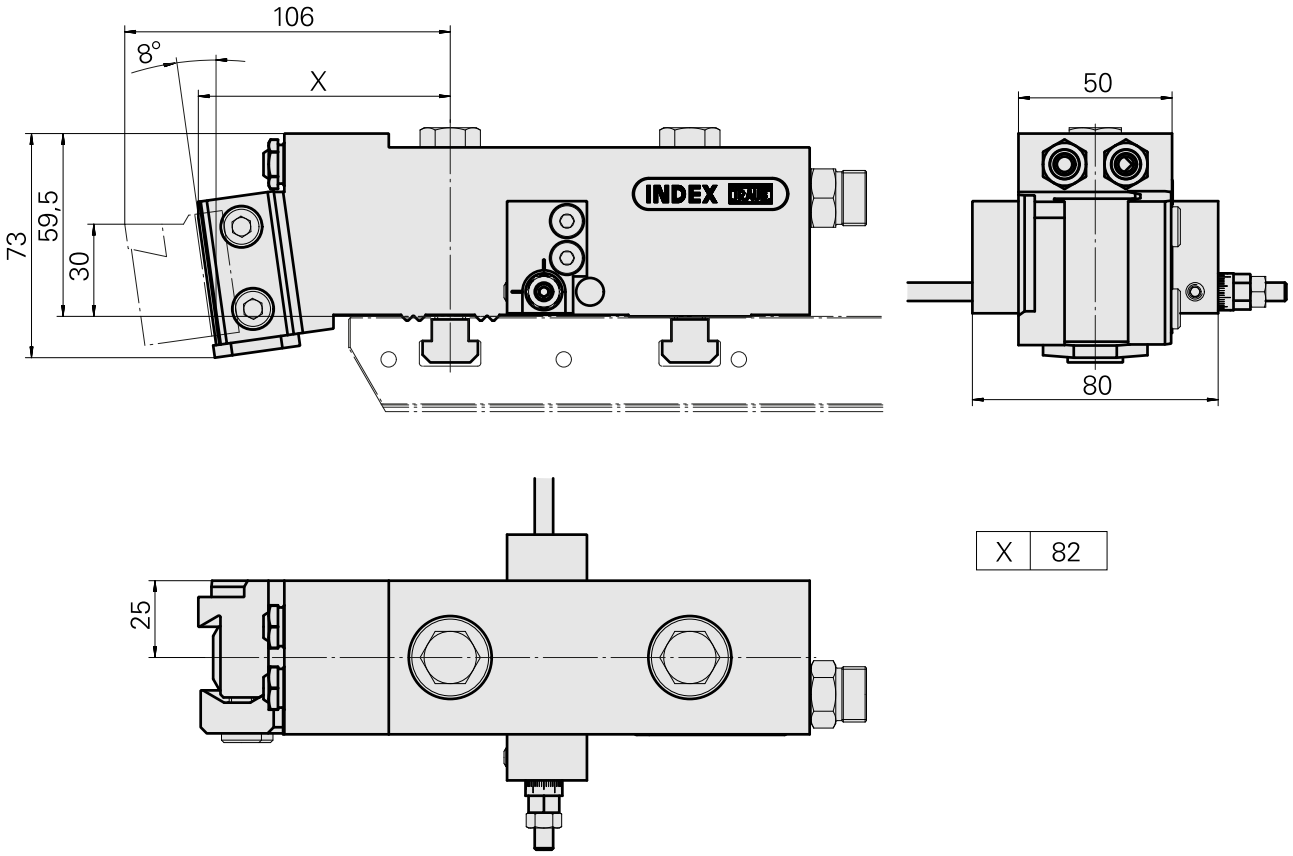

X	82

Documents

No downloads available for this product

Accessories

Optional accessories

Other accessories

EX.SOC.PLUG/4Z-908 VSTI R 1/4-ED

Product ID : 10886676
Previous product ID : 410773.0025

BUSHING 10 D x 6 D x 12,5

Product ID : 10670360
Previous product ID : W67530.0824

Coolant Nozzle

Product ID : 11031912
Previous product ID : W67500.3208

HOLLOW SCREW M14x1 M14x1

Product ID : 10105238
Previous product ID : W67530.0818

Nozzle M6 mit D1,6

Product ID : 10147428
Previous product ID : W00019.0216

Stop Feineinstellung; groß

Product ID : 10823911
Previous product ID : W9990754