Drilling tool holder Shank 40 ER25

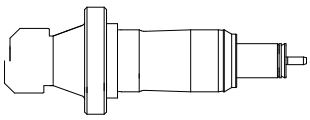

Technical data

Shank TNL	Shank 40
Drive	not live
Cooling	internal
Pressure	120 bar
Mounting	ER25
INDEX TRAUB products	TNK36 • TNL26

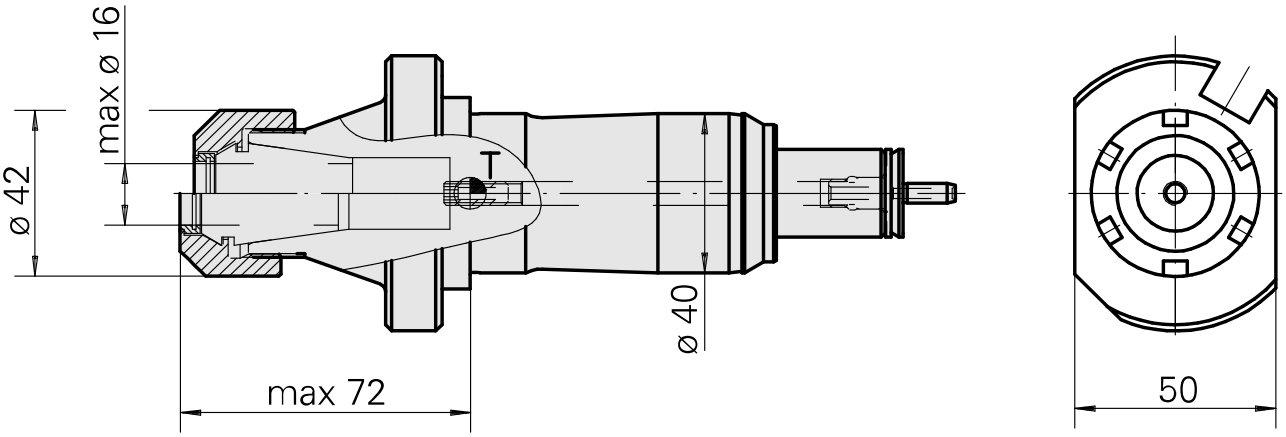

Documents

No downloads available for this product

Accessories

Required for operation

Spanner

Product ID : 10802433
Previous product ID : 490219.0251

TH accessories category	Mounting	Collet type	Clamping nut type
Tool	ER25	ER 25	Female thread

Tools for Collet chucks
Clamping nut wrench

Optional accessories

Tool holder accessories

Clamping nut, for internal cooling lubricant supply

Product ID : 10464259
Previous product ID : 901939.3251

TH accessories category	Mounting	Collet type	Clamping nut type
Clamping nut	ER25	ER 25	Female thread

Other accessories

Clamping collet

Product ID : 10206464
Previous product ID : 901930.3---

tapping tool collet ET-1-25

Product ID : 10191234
Previous product ID : 3224--

tapping tool collet

Product ID : 10256515
Previous product ID : WZ9990.9507F

Collet chuck

Product ID : 10029756
Previous product ID : W999067-

Clamping collet, sealed

Product ID : 10698406
Previous product ID : W999085-

Sealing washer

Product ID : 10736854
Previous product ID : W99904--