INDEX

Milling unit VDI 40 2:1 ER32

Technical data

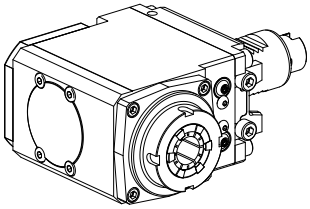

Shank VDI	VDI 40
Drive	Dog clutch
Fixation VDI	Vee bar
Speed ratio	2:1
Cooling	external, internal optional
Pressure	20 bar
Mounting	ER32
reversable 180°	yes
Direction	same as drive direction
X [mm]	90 (3.54")
Y [mm]	–
Z [mm]	94.5 (3.72)
INDEX TRAUB products	G250

Note

No dry run permitted with internal cooling! When used on the YB turret, a collision check must be carried out!

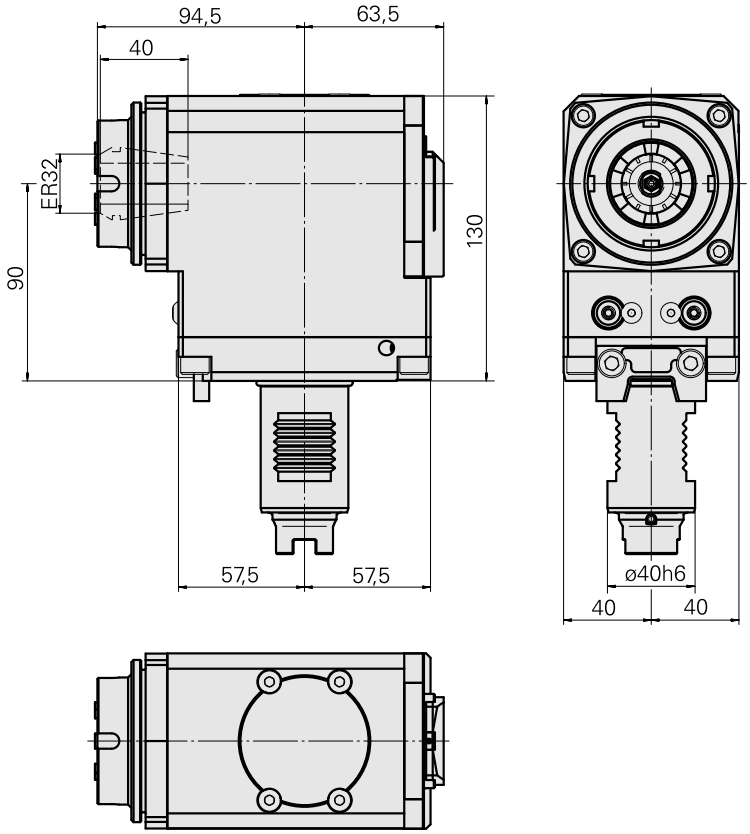
94,5
63,5
40
ER32
90
130
57,5
57,5
ø40h6
40
40

Documents

No downloads available for this product

Accessories

Required for operation

Spanner

Product ID : 10174063
Previous product ID : 325767

TH accessories category	Mounting	Collet type	Clamping nut type
Tool	ER32	ER 32	Male thread
Tools for Collet chucks			
Clamping nut wrench			

Hook wrench

Product ID : 10567017
Previous product ID : 490340.0590

TH accessories category	Clamping nut type	Tools for Collet chucks
Tool	Outside diameter 55-62 mm	Hook wrench

Optional accessories

Tool holder accessories

Clamping nut

Product ID : 10322936
Previous product ID : 325950

TH accessories category	Mounting	Collet type	Clamping nut type
Clamping nut	ER32	ER 32	Male thread

Other accessories

Clamping collet

Product ID : 10187712
Previous product ID : 901930.6---

tapping tool collet ET-1-32

Product ID : 10640099
Previous product ID : 3242--

Collet chuck

Product ID : 10659178
Previous product ID : W999068-

tapping tool collet

Product ID : 10601144
Previous product ID : WZ9990.9509F

Coolant Supply

Product ID : 10089670
Previous product ID : W9990089

SPRAY NOZZLE 14D/M6

Product ID : 10358770
Previous product ID : 474550.0121

Lens head screw

Product ID : 10864070
Previous product ID : 410243.0506