INDEX

Setting gauge, fixture for V gibs

Technical features

TH accessories category	Fixture for V gibs
Mounting	Gauge V-gib Single-sp. machine
Tool mounting	VDI 40

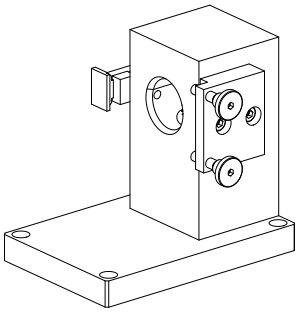

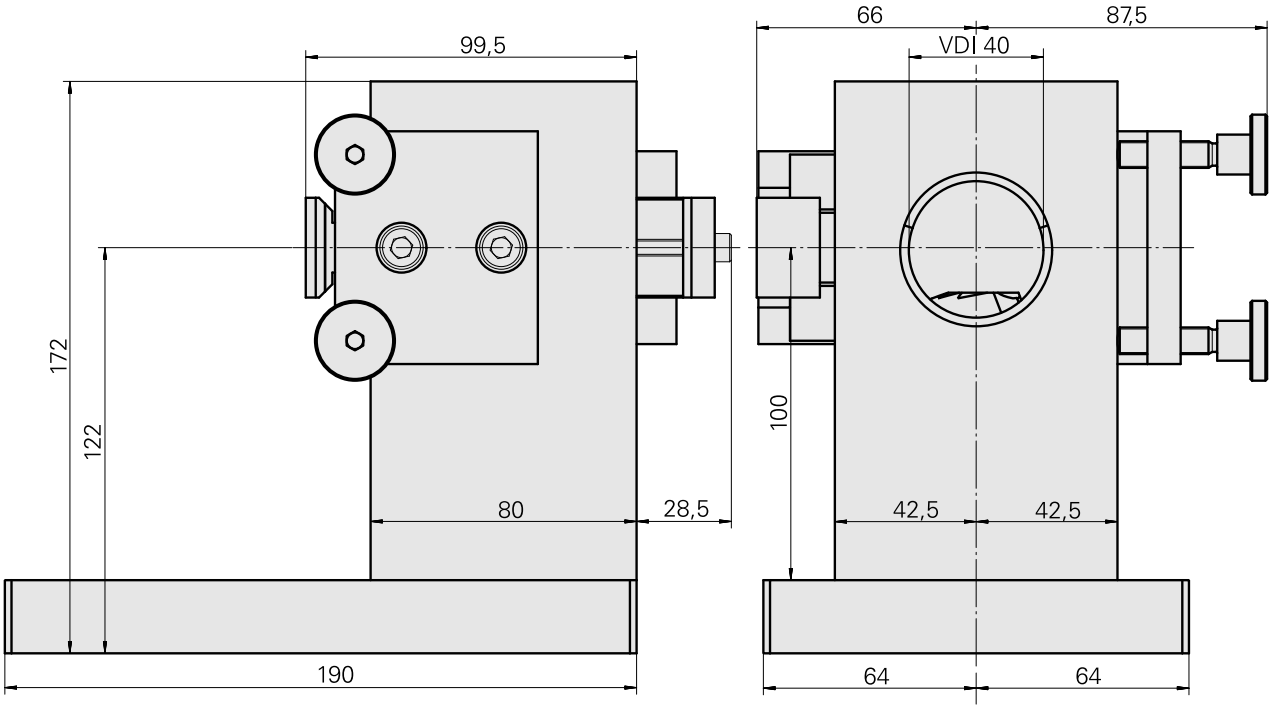

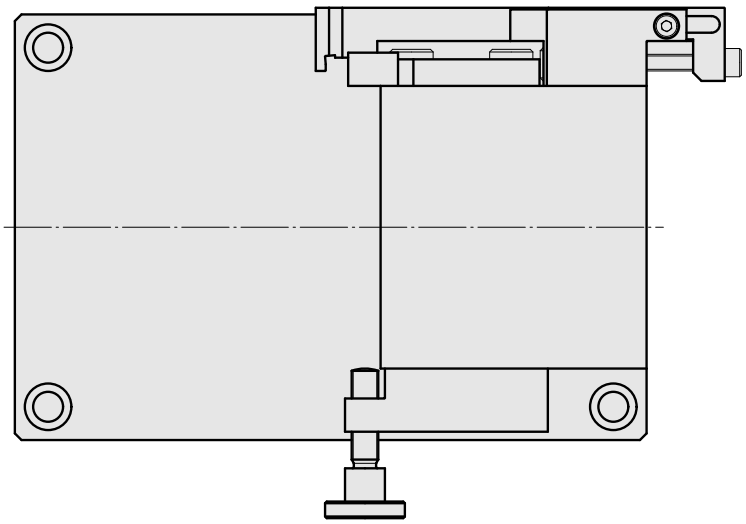

Documents

No downloads available for this product