INDEX

Clamping collet 145E/F25 Ø=15,00

技术特点

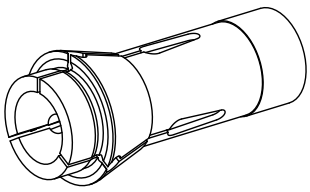

Clamping device size	145E/F25
manufacturer product line	
Clamping type	grooved
Nominal diameter (mm)	15 Millimeter
Clamping method	External clamping
Collet version	Slots vulcanized (standard)
manufacturer product line	Schlenker

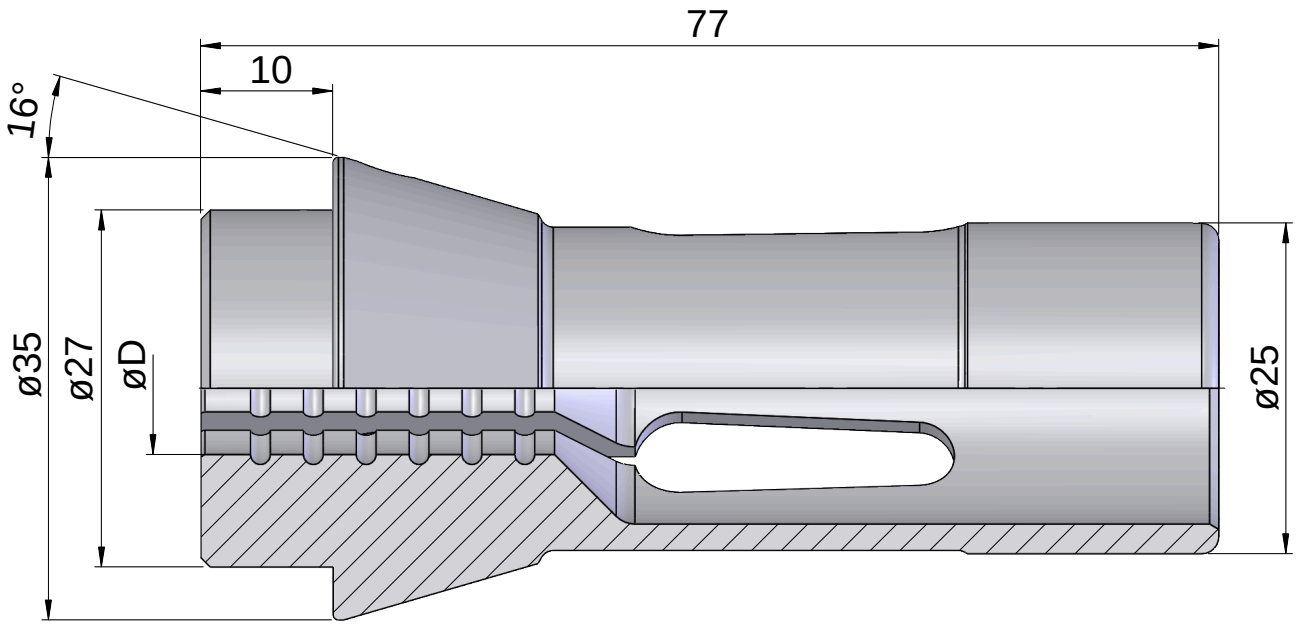

文件

没有针对此产品的任何下载