Grooving tool holding block Löcher Syste

Technical data

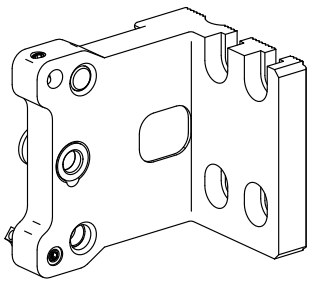

Drive	not live
Cooling	external
Mounting	Löcher System
INDEX TRAUB products	C100 • C200 • G200 • G200.2 • G220 • R200

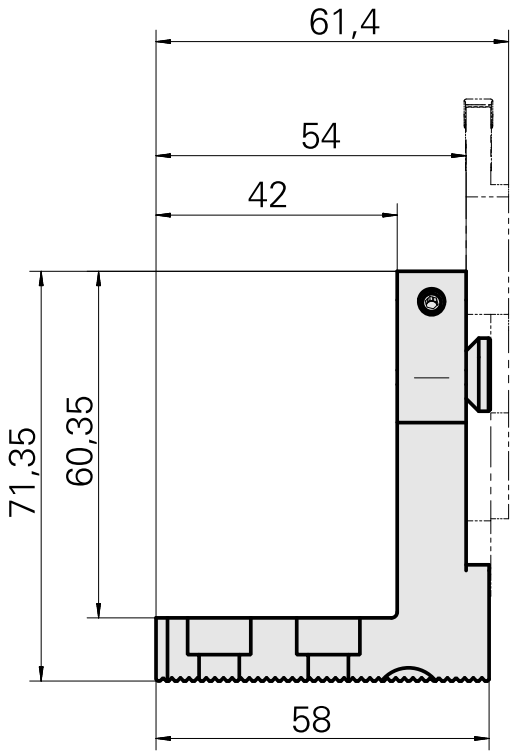

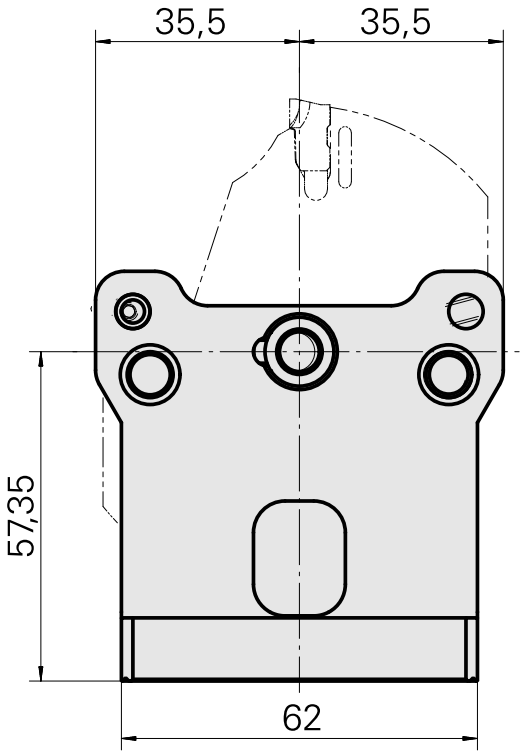

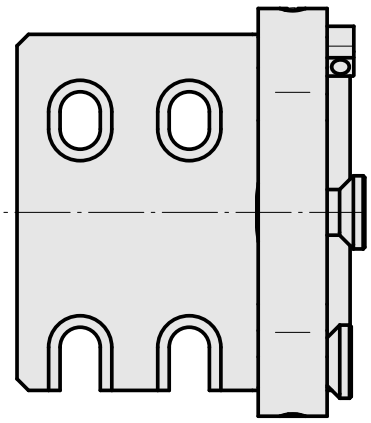

Documents

Product notes

DE (pdf)

FR (pdf)

EN (pdf)

Accessories

Optional accessories

Tool holder accessories

Assembly device

Product ID : 12038458
Previous product ID :

TH accessories category	Mounting
Cutting tools	Löcher System

Product ID : 12035591
Previous product ID :

TH accessories category	Mounting
Cutting tools	Löcher System

Housing

Product ID : 12035599
Previous product ID :

TH accessories category	Mounting
Cutting tools	Löcher System

Housing

Product ID : 12035610
Previous product ID :

TH accessories category	Mounting
Cutting tools	Löcher System

Housing

Product ID : 12037166
Previous product ID :

TH accessories category	Mounting
Cutting tools	Löcher System

Housing

Product ID : 12037169
Previous product ID :

TH accessories category	Mounting
Cutting tools	Löcher System

Housing

Product ID : 12037170
Previous product ID :

TH accessories category	Mounting
Cutting tools	Löcher System

Housing

Product ID : 12035619
Previous product ID :

TH accessories category	Mounting
Cutting tools	Löcher System

Housing

Product ID : 12035620
Previous product ID :

TH accessories category	Mounting
Cutting tools	Löcher System

Housing

Product ID : 12035621
Previous product ID :

TH accessories category	Mounting
Cutting tools	Löcher System

Housing

Product ID : 12035622
Previous product ID :

TH accessories category	Mounting
Cutting tools	Löcher System

Housing

Product ID : 12035623
Previous product ID :

TH accessories category	Mounting
Cutting tools	Löcher System

Housing

Product ID : 12035624
Previous product ID :

TH accessories category	Mounting
Cutting tools	Löcher System

Other accessories

Nozzle

Product ID : 12035636
Previous product ID :

Screw M8x1-LH 15,5LG 1000.602.15,5L

Product ID : 12035639
Previous product ID :

Screw M8x1-RH 15,5LG 1000.602.15,5R

Product ID : 12037063
Previous product ID :

Sleeve

Product ID : 12036532
Previous product ID :

Sleeve

Product ID : 12036533
Previous product ID :