INDEX

WFB 20-12 Shrink-fit mounting D3

Technical data

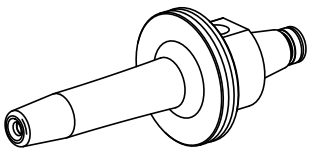

TH accessories category	WFB 20-12
Mounting	Shrink-fit mounting D3
Quick change inserts	shrink-fit mounting

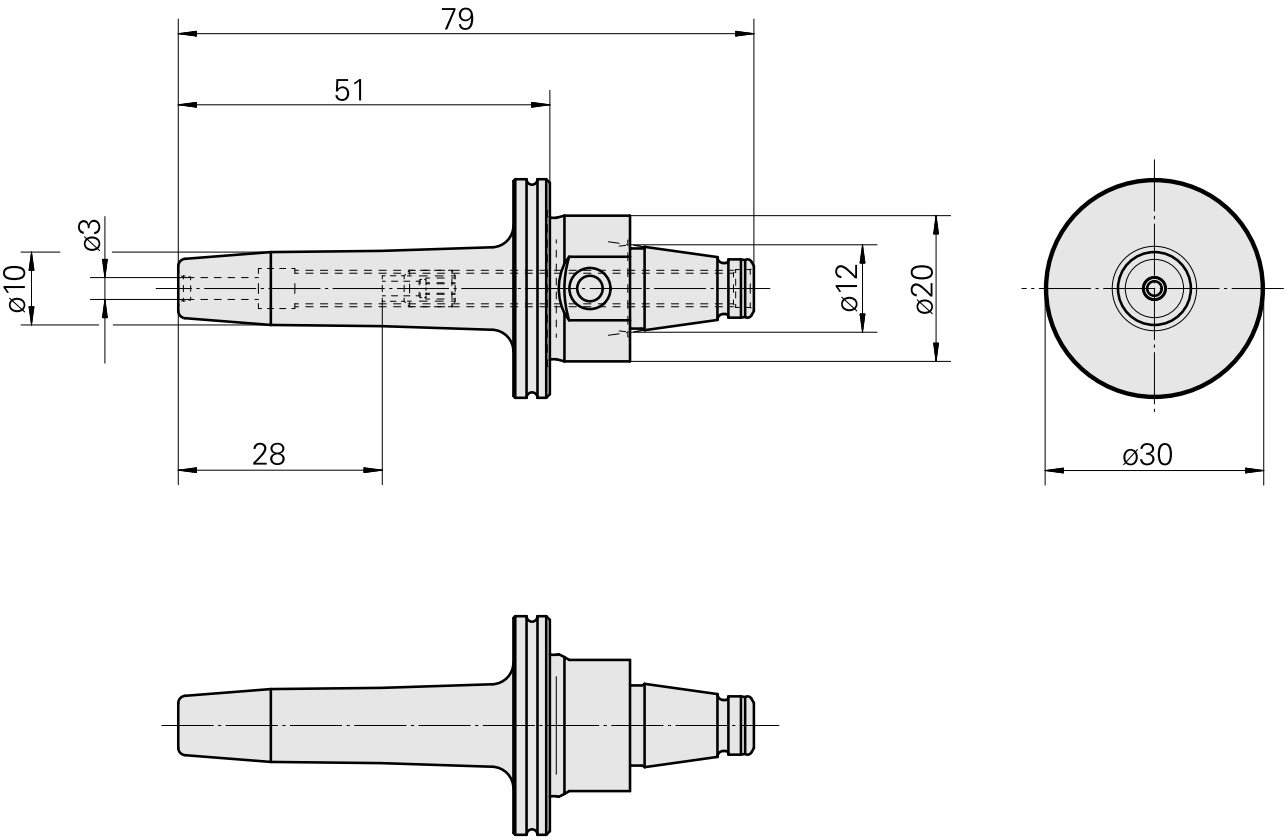

Documents

No downloads available for this product

Accessories

Optional accessories

Other accessories

Adjusting screw M 5x10

Product ID : 10674886
Previous product ID : 326793