10741997
908127.6141

INDEX

3-jaw chuck

Technical data

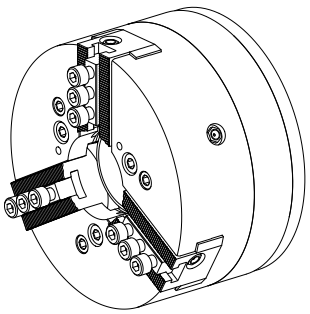

INDEX TRAUB products	G200.2 • G220
Spindle clearance	65mm
Machining side	Counter spindle • Main spindle
manufacturer product line	KFD-175/3HS 1/16
Spindle mounting	AP140
Clamping device size	175
manufacturer product line	Roehm

No 3-side view is currently available for this product

Documents

No downloads available for this product

Accessories

Required for operation

Adaptor

Product ID : 10287140
Previous product ID : 908127.8451