INDEX CAPTO C3 D10

Technical data

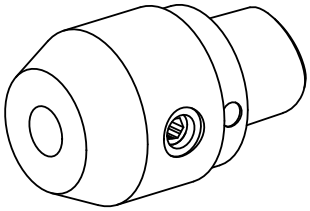

TH accessories category	INDEX CAPTO C3
Mounting	D10
Quick change inserts	Weldon mounting

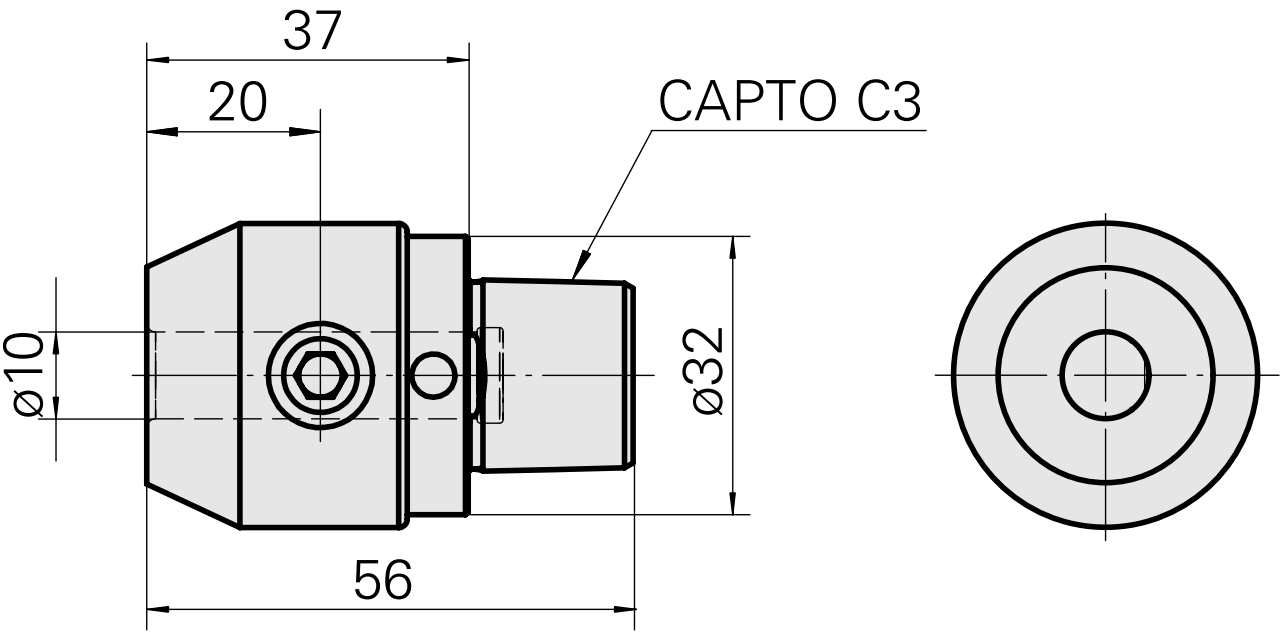

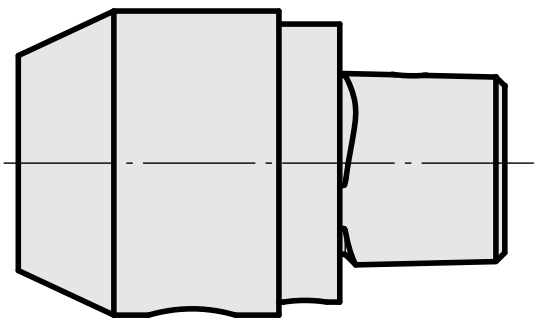

Documents

No downloads available for this product