INDEX

# Clamping collet 145E/F25 Ø=15,00

## Technical data

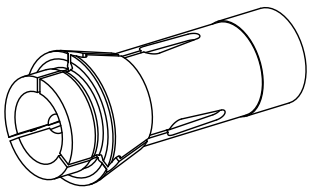

| | |
|---|---|
| **Clamping device size** | 145E/F25 |
| **manufacturer product line** | |
| **Clamping type** | grooved |
| **Nominal diameter (mm)** | 15 Millimeter |
| **Clamping method** | External clamping |
| **Collet version** | Slots vulcanized (standard) |
| **manufacturer product line** | Schlenker |

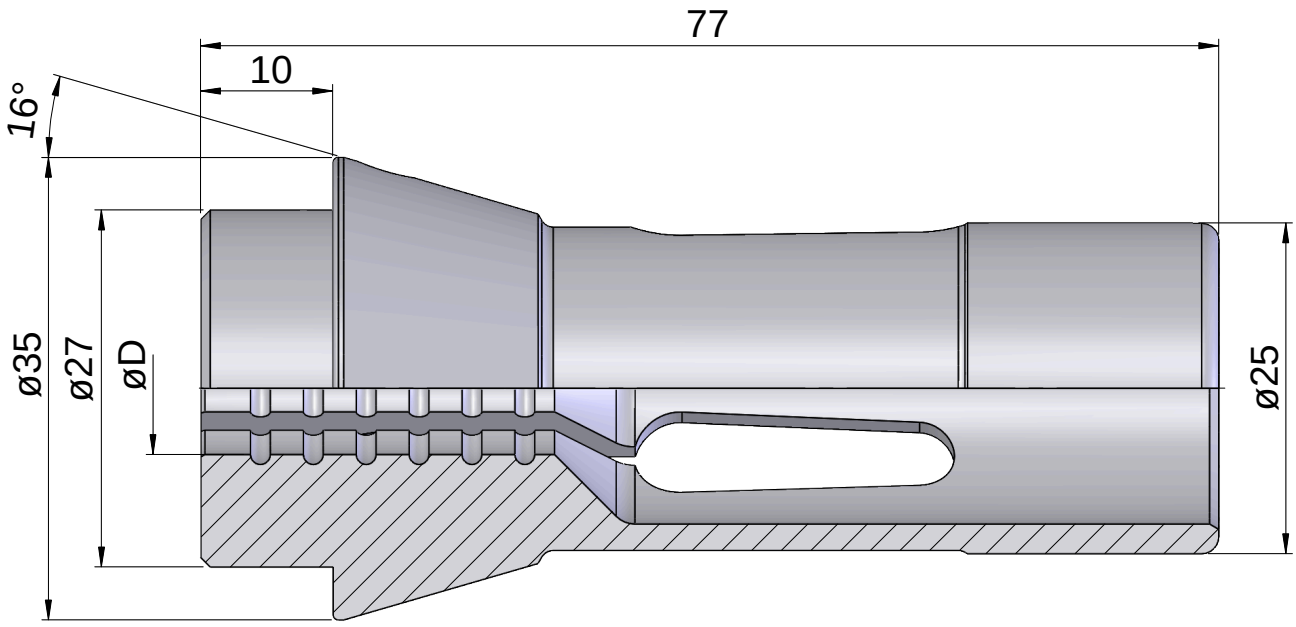

## Documents

No downloads available for this product