Screw M8x1-LH 15,5LG 1000.602.15,5L

Technical data

There are currently no additional technical features stored for this product

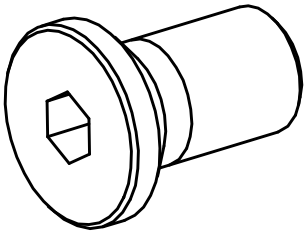

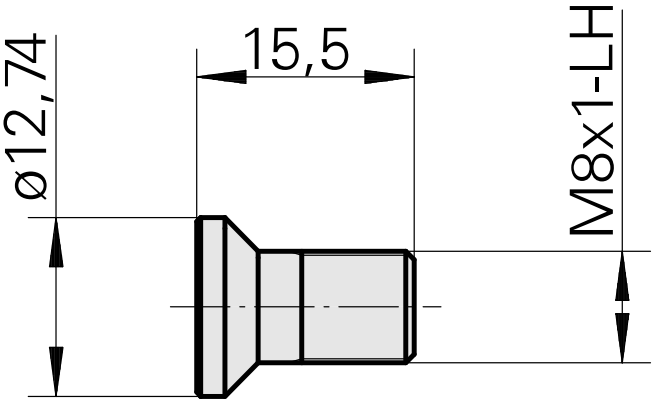

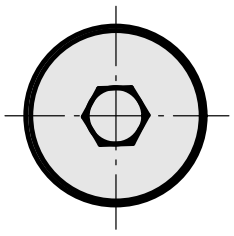

Documents

No downloads available for this product