INDEX

Bar stop VDI 20, adjustable, live

Technical data

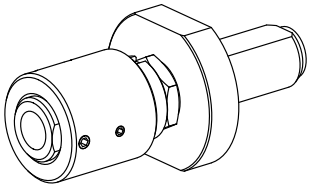

Shank VDI	VDI 20
Drive	not live
Fixation VDI	none
reversable 180°	no
Data carrier	check tool station bore
X [mm]	49.5 - 71.5 (1.95" - 2.81")
Y [mm]	–
Z [mm]	–

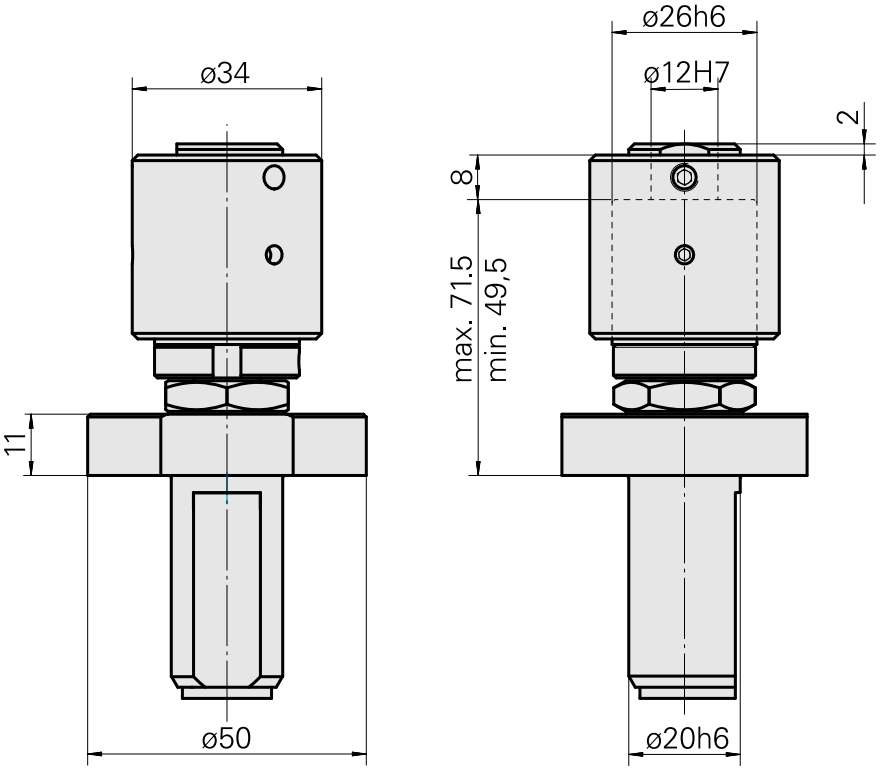

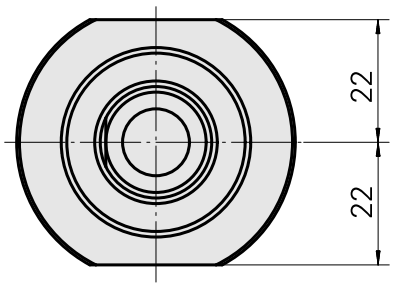

Documents

Product notes

DE (pdf)

FR (pdf)

EN (pdf)