INDEX

Basic holder MS16 grooving slide

Technical data

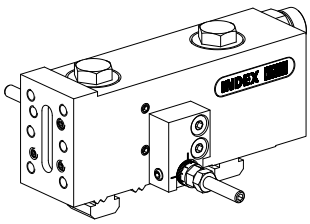

Slide system MS	MS16 grooving slide
Drive	not live
Fixation MS	W serration
Cooling	external
Pressure	80 bar
X [mm]	29 (1.14")
Y [mm]	–
Z [mm]	–
INDEX TRAUB products	MS16-6 • MS16-6 Plus

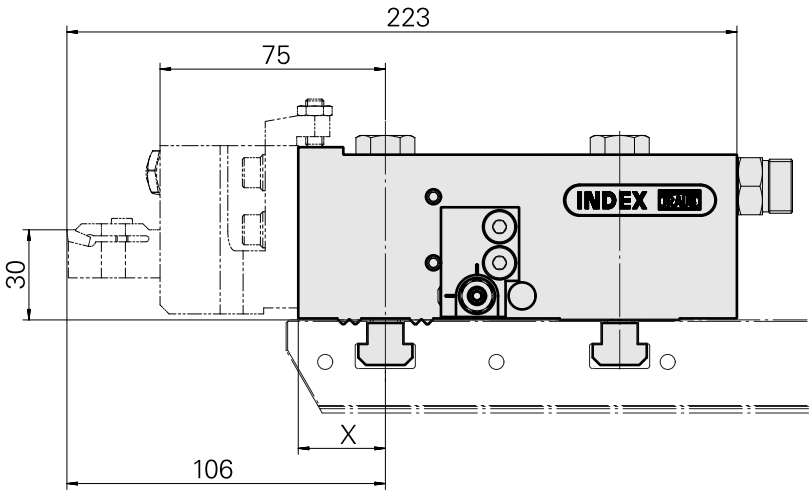

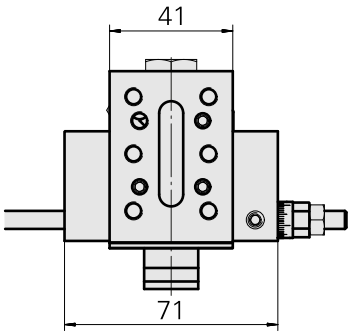

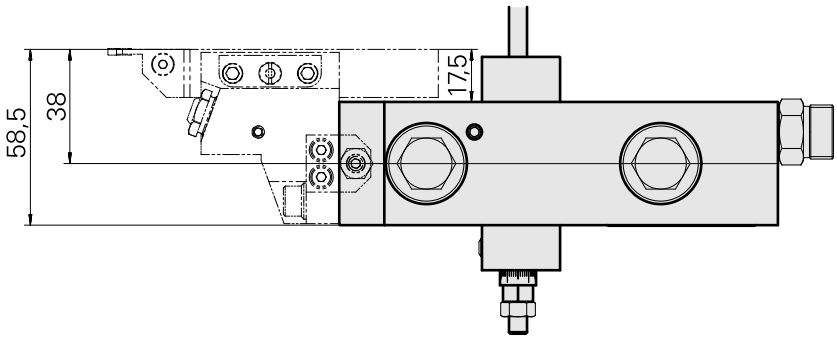

X	29

Documents

No downloads available for this product

Accessories

Optional accessories

MS tool holders

[Grooving tool holding block Square 16x16, adjustable in Y direction]

Product ID : 10320028
Previous product ID : W9990722

Drive	Cooling	Pressure	Direction
not live	external	80 bar	left-handed run
Mounting	**X [mm]**	**Y [mm]**	**Z [mm]**
Square 16x16	46 (1.81")	–	22 (0.87)
INDEX TRAUB products			
MS16-6 • MS16-6 Plus			

[Grooving tool holding block Square 16x16, adjustable in Y direction]

Product ID : 10600943
Previous product ID : W9990723

Drive	Cooling	Pressure	Direction
not live	external	80 bar	right-handed run
Mounting	**X [mm]**	**Y [mm]**	**Z [mm]**
Square 16x16	46 (1.81")	–	22 (0.87)
INDEX TRAUB products			
MS16-6 • MS16-6 Plus			

Other accessories

[EX.SOC.PLUG/4Z-908 VSTI R 1/4-ED]

Product ID : 10886676
Previous product ID : 410773.0025

Stop Feineinstellung; groß

Product ID : 10823911
Previous product ID : W9990754