Basic holder MS16 cutoff slide, adjustable in Y direction

Technical data

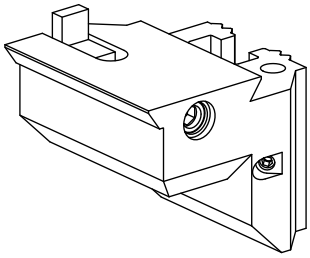

Slide system MS	MS16 cutoff slide
Drive	not live
Fixation MS	W serration
X [mm]	61.9 (2.44")
Y [mm]	–
Z [mm]	52 (2.05)
INDEX TRAUB products	MS16-6 • MS16-6 Plus

Note

Can be used only in positions 5.0 and 6.0!

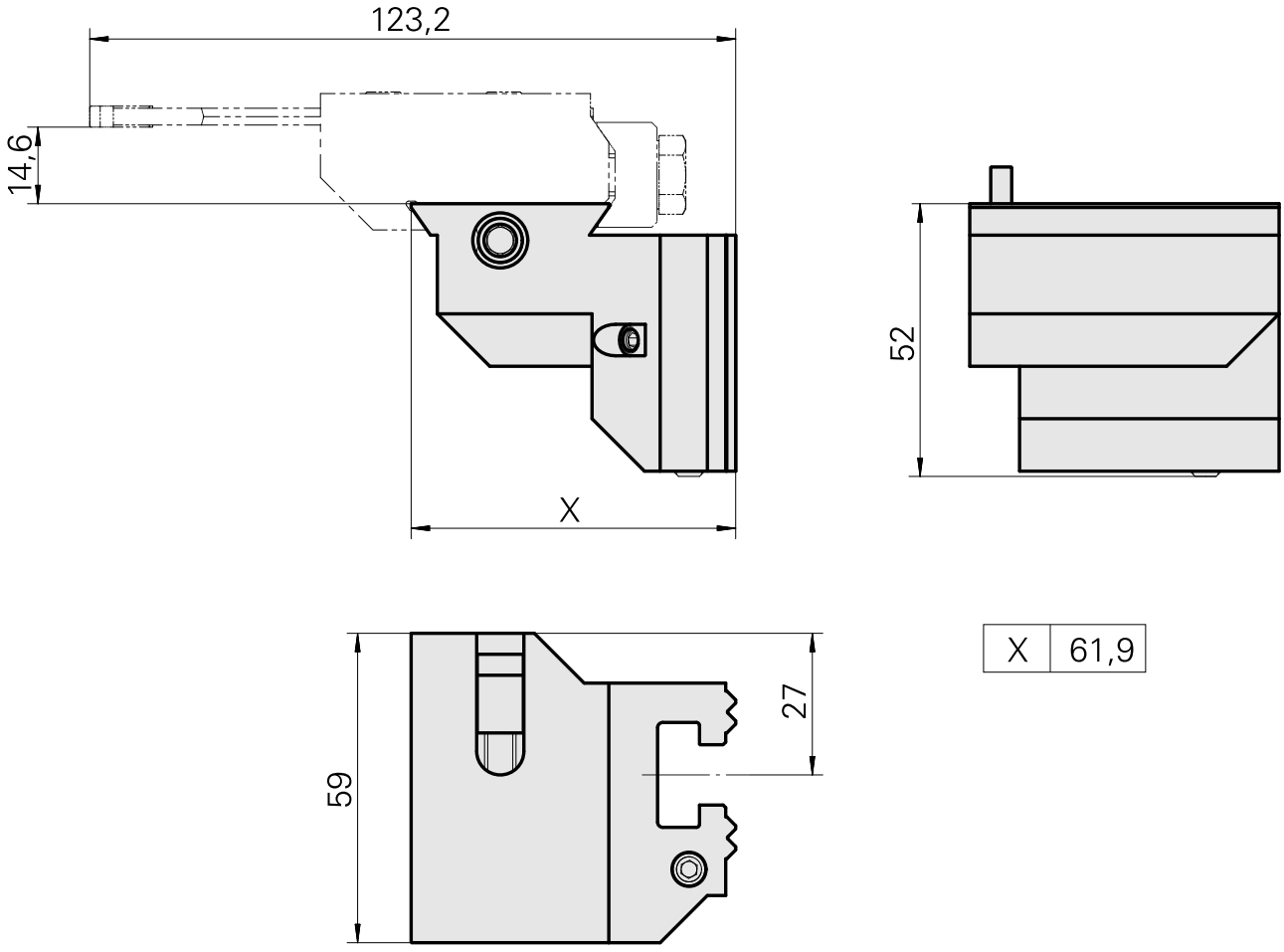

X	61,9

Documents

No downloads available for this product

Accessories

Optional accessories

MS tool holders

Grooving tool holding block Trapezoid 26

Product ID : 10099347
Previous product ID : W9991146

Drive	Direction	Mounting	X [mm]
not live	left-handed run	Trapezoid 26x4	55 (2.17")
Y [mm]	**Z [mm]**	**INDEX TRAUB products**	
–	21 (0.83)	MS16-6 • MS16-6 Plus	

Grooving tool holding block 26x4

Product ID : 10972410
Previous product ID : W9991145

Drive	Direction	Mounting	X [mm]
not live	right-handed run	Trapezoid 26x4	55 (2.17")
Y [mm]	**Z [mm]**	**INDEX TRAUB products**	
–	21 (0.83)	MS16-6 • MS16-6 Plus	