Adapter mounting aid WFB 24-16

Technical features

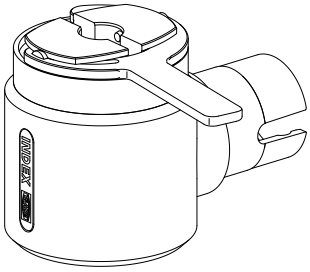

TH accessories category	Adapter mounting aid
Tool mounting	WFB 24-16

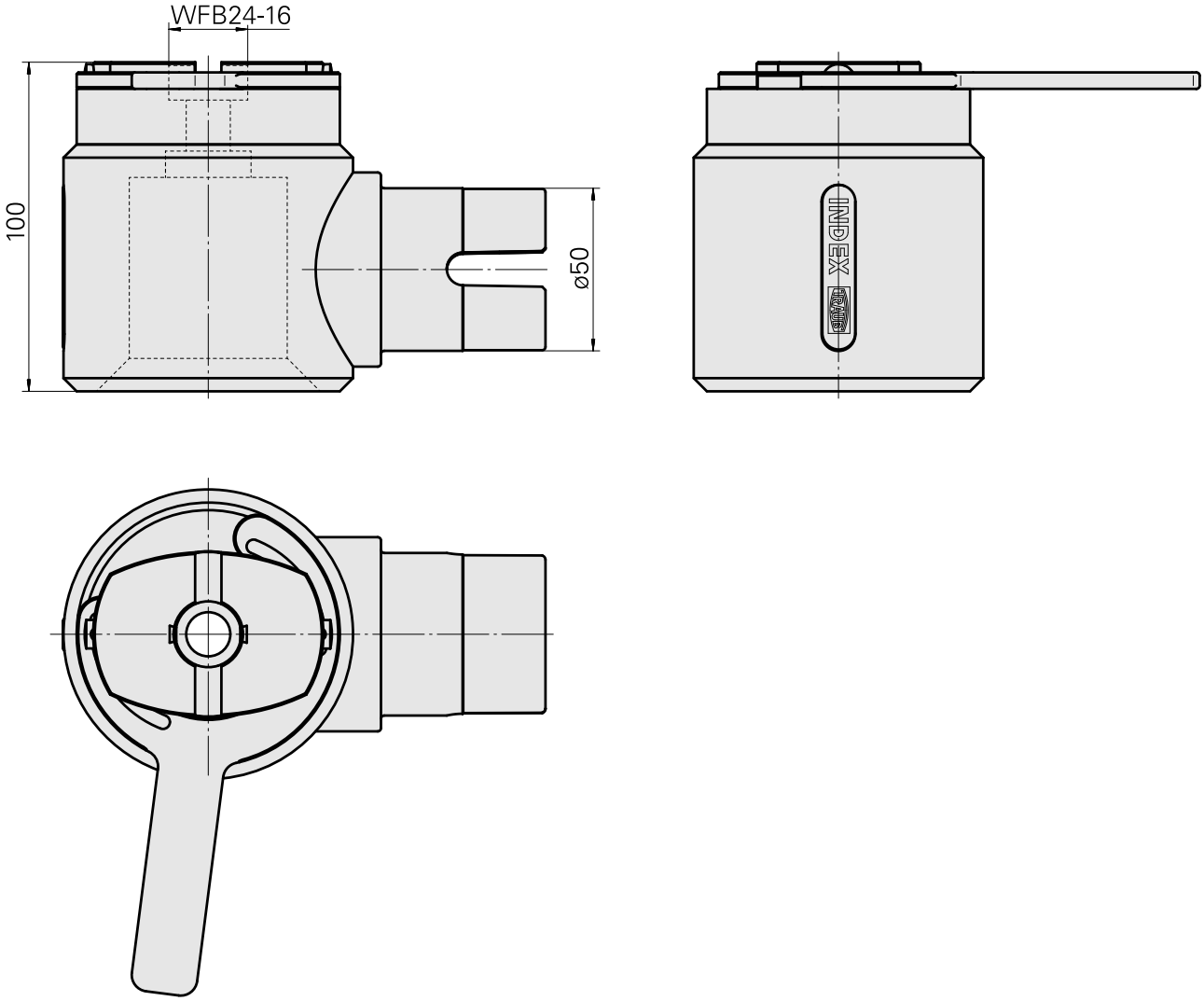

Documents

No downloads available for this product