INDEX

Guide bush T223 Ø=3,00

Technical data

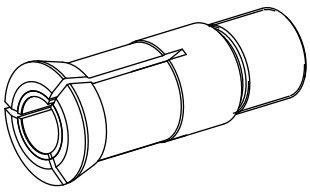

Clamping device size	T223
manufacturer product line	
Clamping type	with carbide insert
Nominal diameter (mm)	3 Millimeter
Clamping method	External clamping
Collet design	adjustable
Collet version	Slots vulcanized (standard)
manufacturer product line	Schlenker

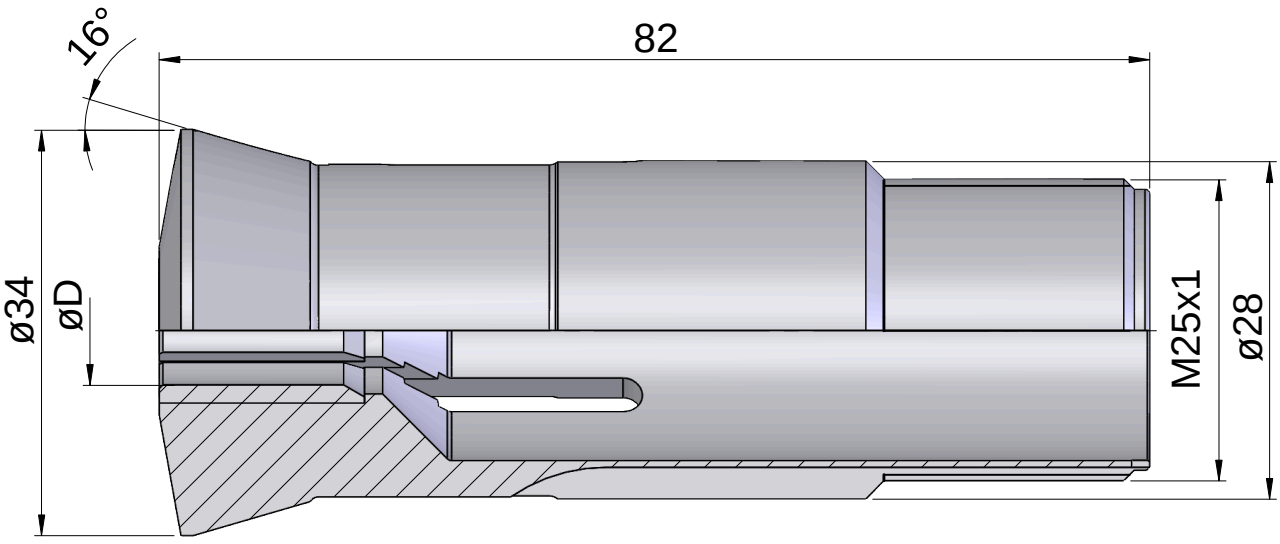

Documents

No downloads available for this product