Adaptor

Technical data

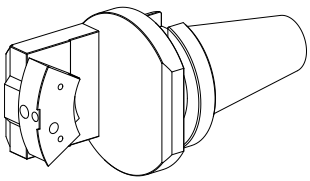

TH accessories category	Adapter for presetting units
Mounting	SK50
Tool mounting	Round prism mounting TNL12

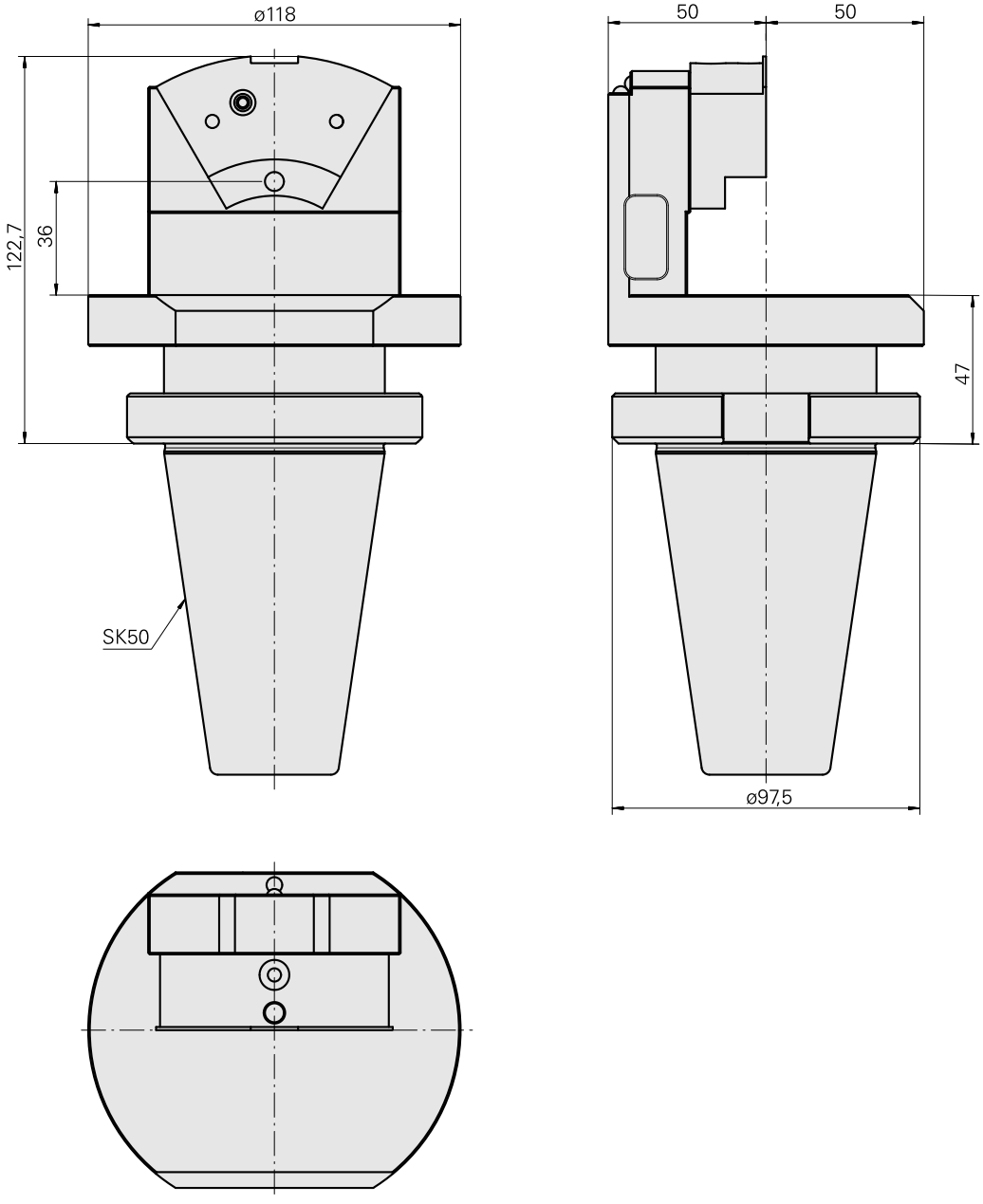

Documents

No downloads available for this product