Drilling tool holder Hydraulic expansion

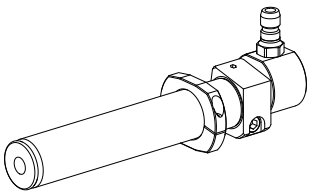

Technical data

Drive	not live
Fixation MS	Clamping ring D28.5
Cooling	internal
Pressure	80 bar
Mounting	Hydraulic expansion chuck D10
X [mm]	–
Y [mm]	–
Z [mm]	–
INDEX TRAUB products	MS22-6 • MS22-8 • MS16-6 • MS24-6 • MS16-6 Plus

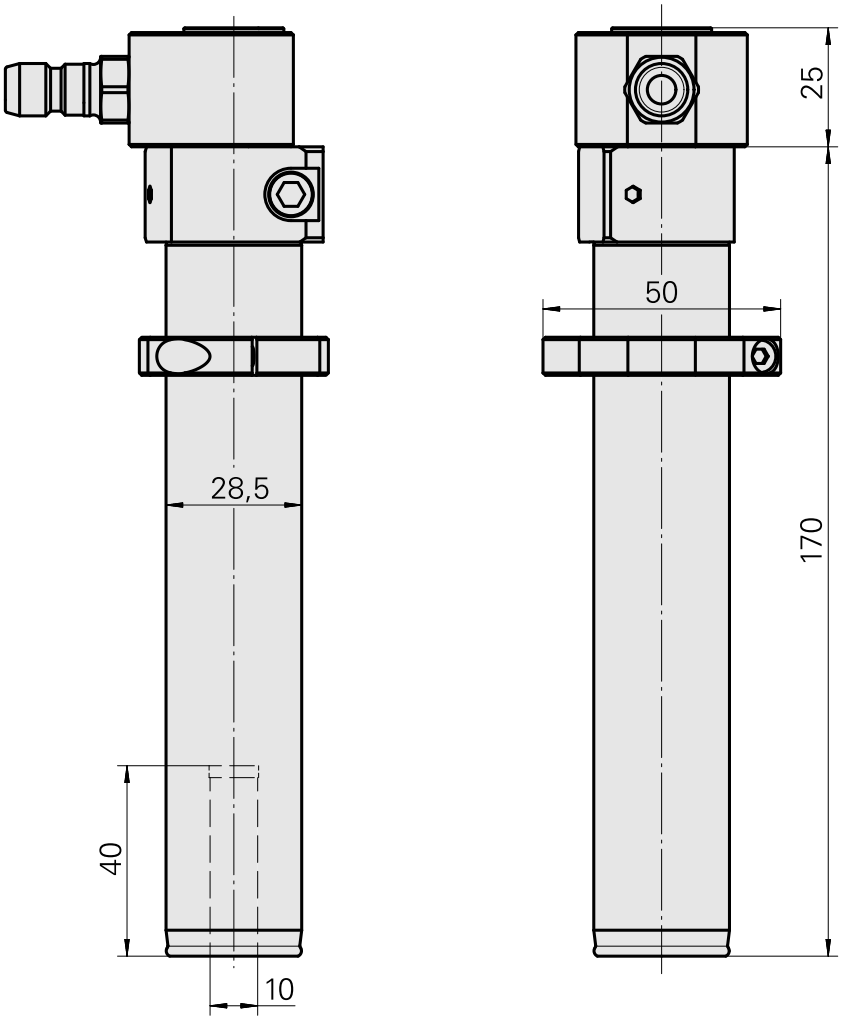

Documents

Product notes

DE (pdf)

EN (pdf)

FR (pdf)

Accessories

Optional accessories

Other accessories

QUICK COUPLING SP-006-0-WR513-11-2 Serie LP

Product ID : 10837142
Previous product ID : 474940.0112