INDEX

# Bar stop VDI 20, adjustable, live

## Technical data

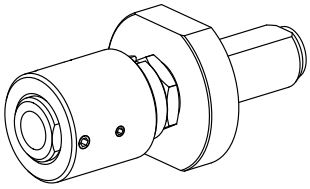

| | |
|---|---|
| **Shank VDI** | VDI 20 |
| **Drive** | not live |
| **Fixation VDI** | none |
| **reversable 180°** | no |
| **Data carrier** | check tool station bore |
| **X [mm]** | 49.5 - 71.5 (1.95" - 2.81") |
| **Y [mm]** | – |
| **Z [mm]** | – |

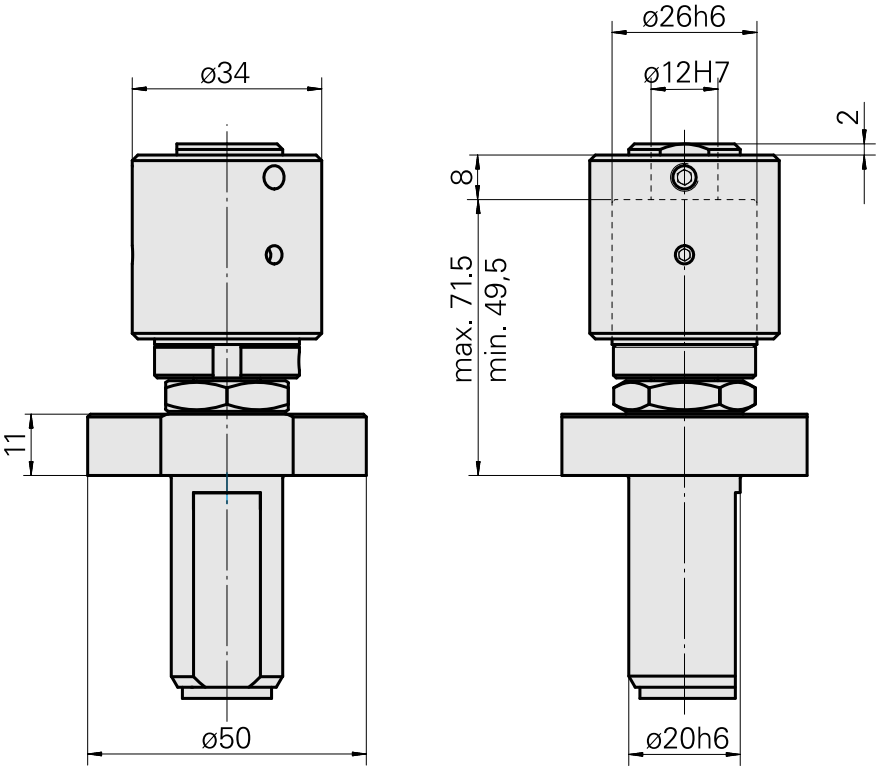


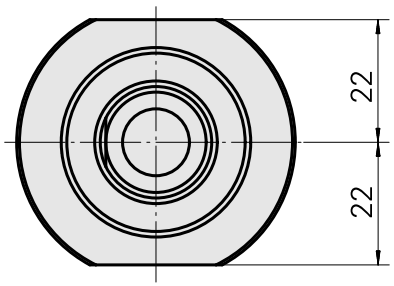

## Documents

**Product notes**

DE (pdf)

FR (pdf)

EN (pdf)