10826931
908127.5291

INDEX

mandrin à 3 mors

Technical data

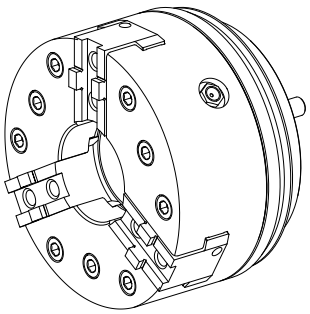

Produits INDEX TRAUB	MS40-6 • MS40P
Passage de broche	40mm
Côté d'usinage	Contre-broche
Fabr. tiers gamme prod.	KFD-HS117
Logement de broche	AP72
Fabr. tiers gamme prod.	Roehm

No 3-side view is currently available for this product

Documents

No downloads available for this product

Accessories

Optional accessories

Turcon® Glyd Ring®

Joint traversee d'arbre

Product ID : 10417845
Previous product ID : 479160.0602

Fabr. tiers gamme prod.	N° matériau TSS	Diamètre base rainure	Larg. rainure
Trelleborg		52.5 Millimeter	3.2 Millimeter

Diamètre alésage [mm]	Fabr. tiers gamme prod.
60 Millimeter	Turcon® Glyd Ring®

Joints toriques

Joint

Product ID : 10913241
Previous product ID : 479108.0371

Fabr. tiers gamme prod.	N° matériau TSS	Épaiss. cordon	Fabr. tiers gamme prod.
Trelleborg		1.78 Millimeter	Joint torique

Other accessories

Vis cylindrique

Product ID : 10997130
Previous product ID : 410260.0820

Douille filetee

Product ID : 10551192
Previous product ID : M82011.40

INDEX

Dispositif d'alésage

Product ID : 10916716
Previous product ID : 908127.8001