INDEX

Mount

Technical data

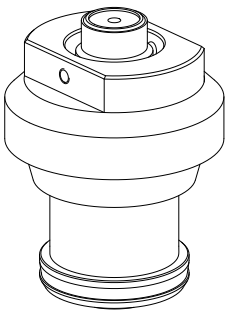

TH accessories category	Adapter pre-adjustment block
Tool mounting	HSK 50

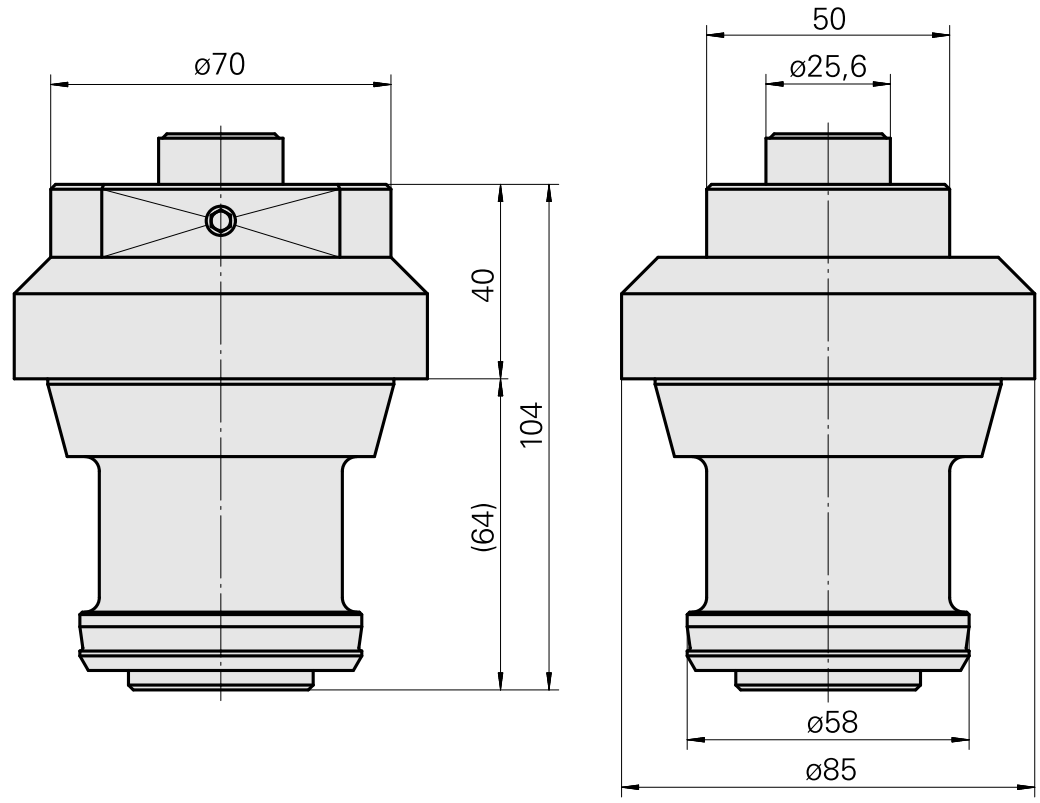

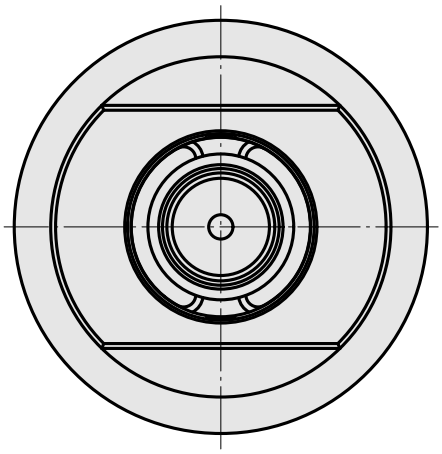

Documents

No downloads available for this product