INDEX

WFB 32-20 Shrink-fit mounting D6

Technical data

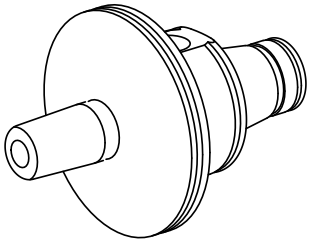

TH accessories category	WFB 32-20
Mounting	Shrink-fit mounting D6
Quick change inserts	shrink-fit mounting

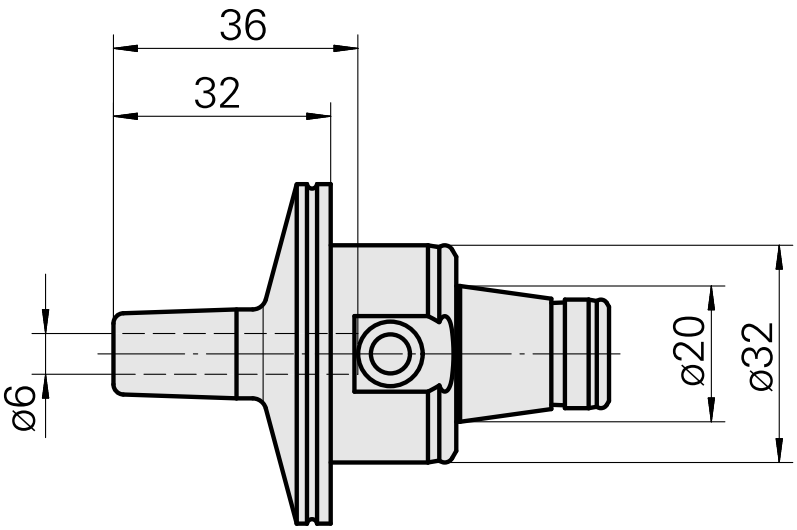

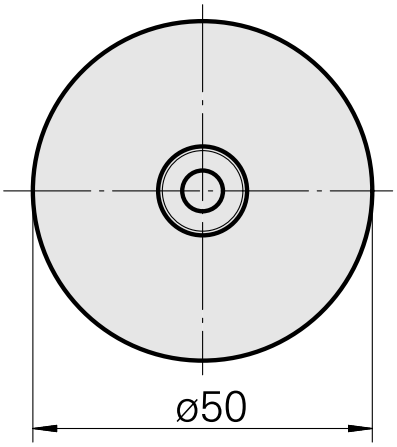

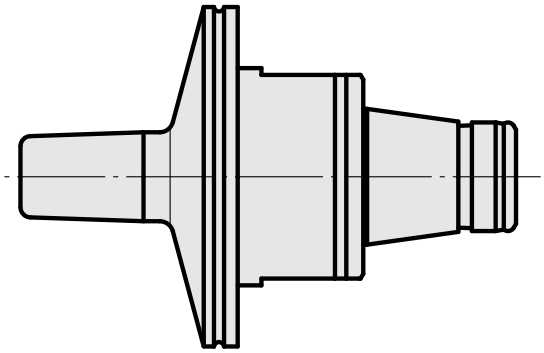

Documents

No downloads available for this product