Presetting device /INDEX CAPTO C4

Technical data

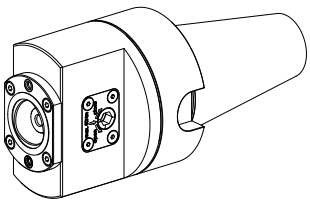

TH accessories category	Adapter for presetting units
Mounting	SK50
Tool mounting	CAPTO C4

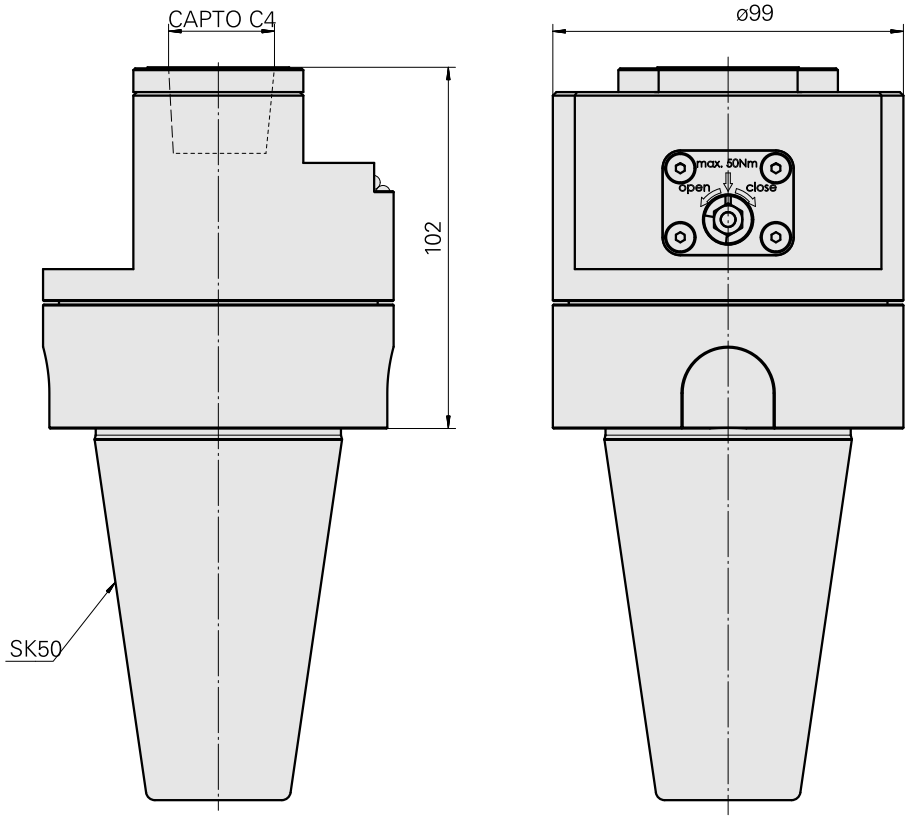

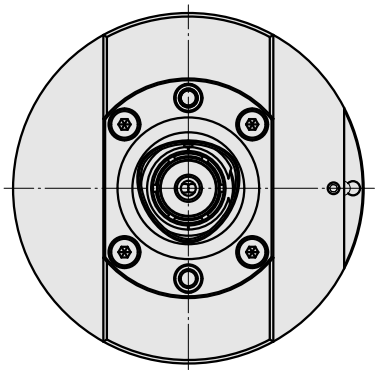

Documents

No downloads available for this product