INDEX

Basic holder VDI 20, horizontally adjustable

Technical data

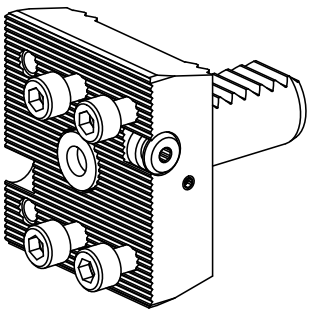

Shank VDI	VDI 20
Drive	not live
Fixation VDI	W serration
Pressure	80 bar
reversable 180°	no
Data carrier	check tool station bore
X [mm]	20 (0.79")
Y [mm]	–
Z [mm]	–
INDEX TRAUB products	C100

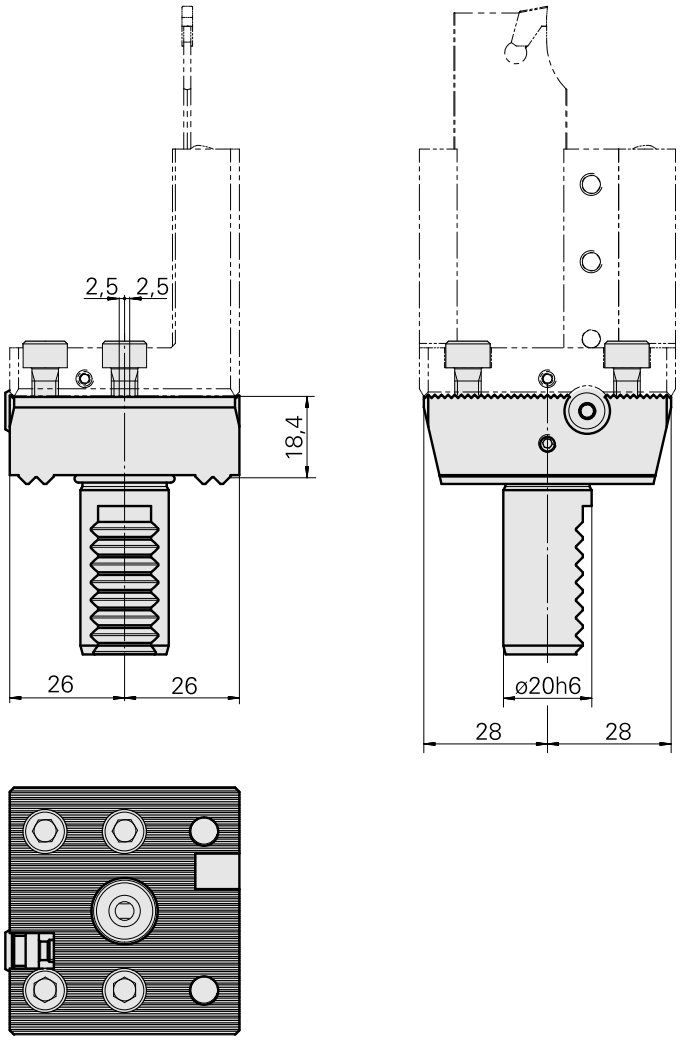

Documents

Product notes

DE (pdf)

EN (pdf)

FR (pdf)

Accessories

Optional accessories

Tool holders with VDI shank

Grooving tool holding block Trapezoid 26, horizontally adjustable

Product ID : 10469292
Previous product ID : W9990001

Drive	Cooling	Pressure	Mounting
not live	external	20 bar	Trapezoid 26x5
X [mm]	**Y [mm]**	**Z [mm]**	**INDEX TRAUB products**
56 (2.20")	–	15 (0.59)	C100

Grooving tool holding block Trapezoid 26, horizontally adjustable

Product ID : 10303482
Previous product ID : W9990002

Drive	Cooling	Pressure	Mounting
not live	external	40 bar	Trapezoid 26x5
X [mm]	**Y [mm]**	**Z [mm]**	**INDEX TRAUB products**
56 (2.20")	–	15 (0.59)	C100