INDEX

Drilling tool holder Shank 28 D12 (0.47

Technical data

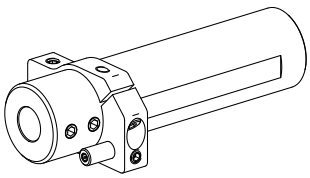

Shank TNL	Shank 28
Drive	not live
Fixation TNL	Pre-centering pin
Cooling	internal
Pressure	120 bar
Mounting	D12
X [mm]	–
Y [mm]	–
Z [mm]	32 (1.26)
INDEX TRAUB products	TNL12 • TNL12.2

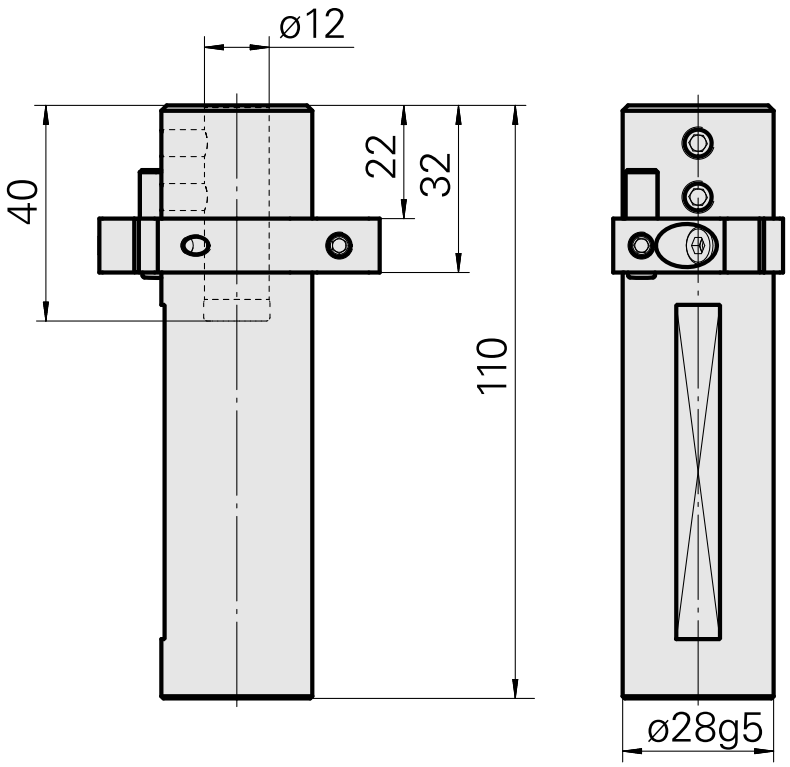

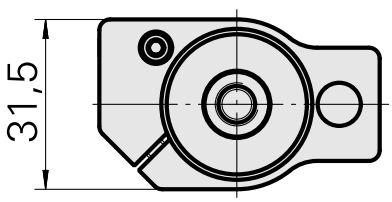

Documents

No downloads available for this product

Accessories

Required for operation

COOLANT TUBE COMPLETE

Product ID : 10255957
Previous product ID : 989156

CL feeder, fixed TNL12.2, Back/front working unit

Product ID : 12063156
Previous product ID :

Optional accessories

Other accessories

Mounting sleeve with collar D12

Product ID : 11060576
Previous product ID : W94280.21--

Spanner

Product ID : 12083203
Previous product ID :