Probe holder HSK 63 T Renishaw D11,2

Technical data

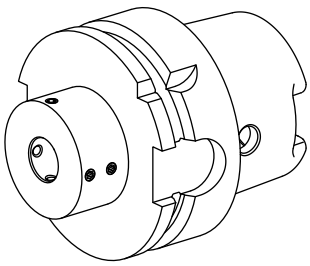

Shank HSK	HSK 63
Form HSK	T
Mounting	Renishaw D11,2
X [mm]	42 (1.65")
Z [mm]	–
INDEX TRAUB products	G220.2

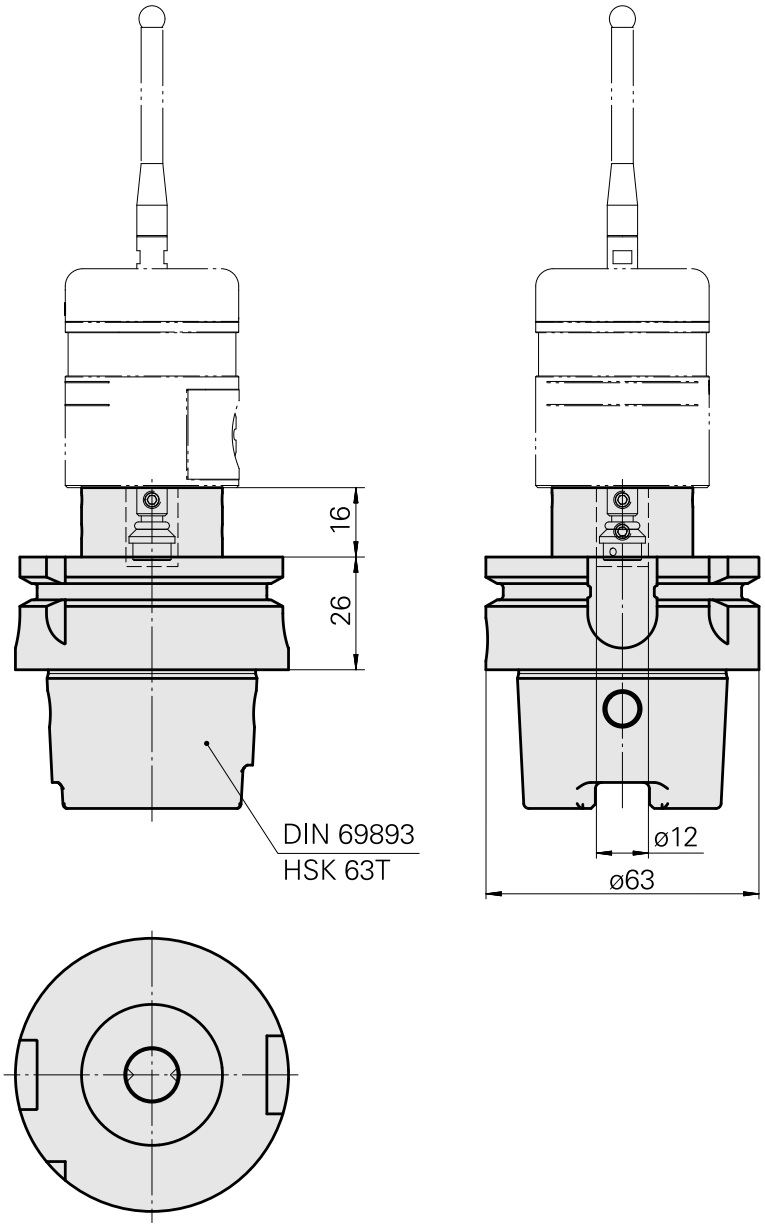

Documents

No downloads available for this product

Accessories

Required for operation

Not defined

Product ID : 12133465
Previous product ID :

Push-button insert

Product ID : 12133466
Previous product ID :

Probe

Product ID : 10338967
Previous product ID : 487542.1441

Optional accessories

Tool holder accessories

Socket wrench

Product ID : 10352082
Previous product ID : WS7800.0010

TH accessories category	Mounting
Tool for KSS adapter	HSK 63 A/C

Coolant adapter kit HSK-A63

Product ID : 11074450
Previous product ID : WS7800.0020

TH accessories category	Mounting
Cooling lubricant transfer set	HSK 63 A/C

Other accessories

Case A-2033-7001

Product ID : 10259626
Previous product ID : 487542.0911