## Technical data

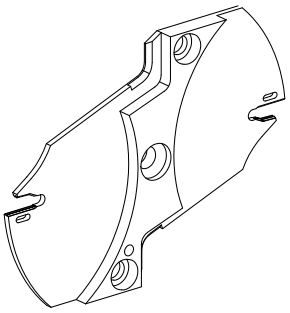

| | |
|---|---|
| **TH accessories category** | Cutting tools |
| **Mounting** | Löcher System |

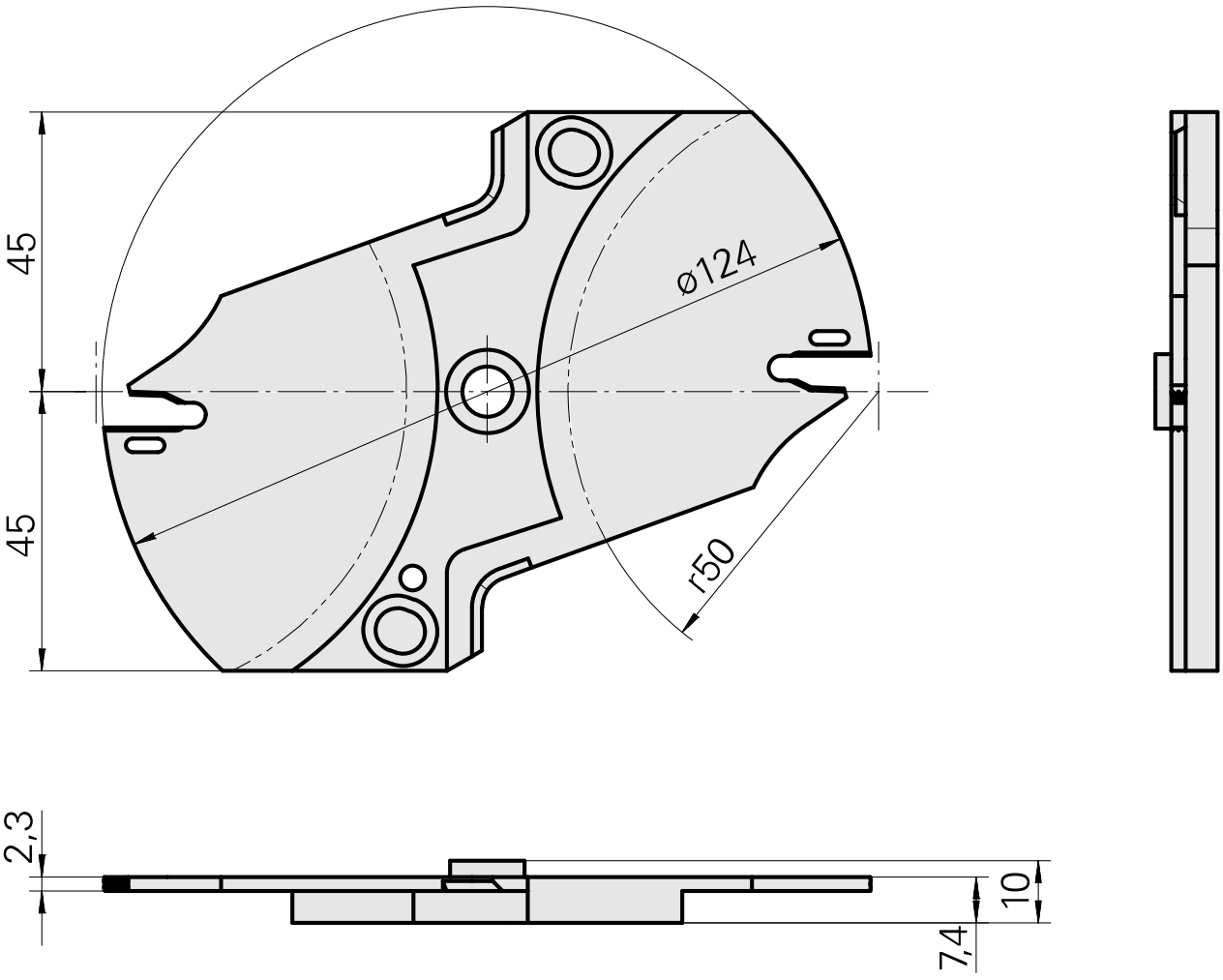

## Documents

No downloads available for this product

## Accessories

### Optional accessories

**Tool holder accessories**

#### Assembly device

Product ID : 12038458
Previous product ID :

| TH accessories category | Mounting |
| --- | --- |
| Cutting tools | Löcher System |

#### Housing

Product ID : 12035619
Previous product ID :

| TH accessories category | Mounting |
| --- | --- |
| Cutting tools | Löcher System |

#### Housing

Product ID : 12035620
Previous product ID :

| TH accessories category | Mounting |
| --- | --- |
| Cutting tools | Löcher System |