INDEX

Grooving tool holding block MS16 cutoff

Technical features

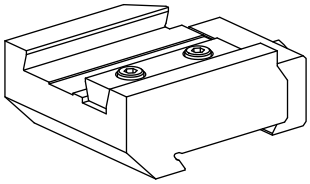

Slide system MS	MS16 cutoff slide
Drive	not live
Fixation MS	Dovetail
Direction	right-handed run
Mounting	Trapezoid 26x4
X [mm]	55 (2.17")
Y [mm]	–
Z [mm]	21 (0.83)
INDEX TRAUB products	MS16-6

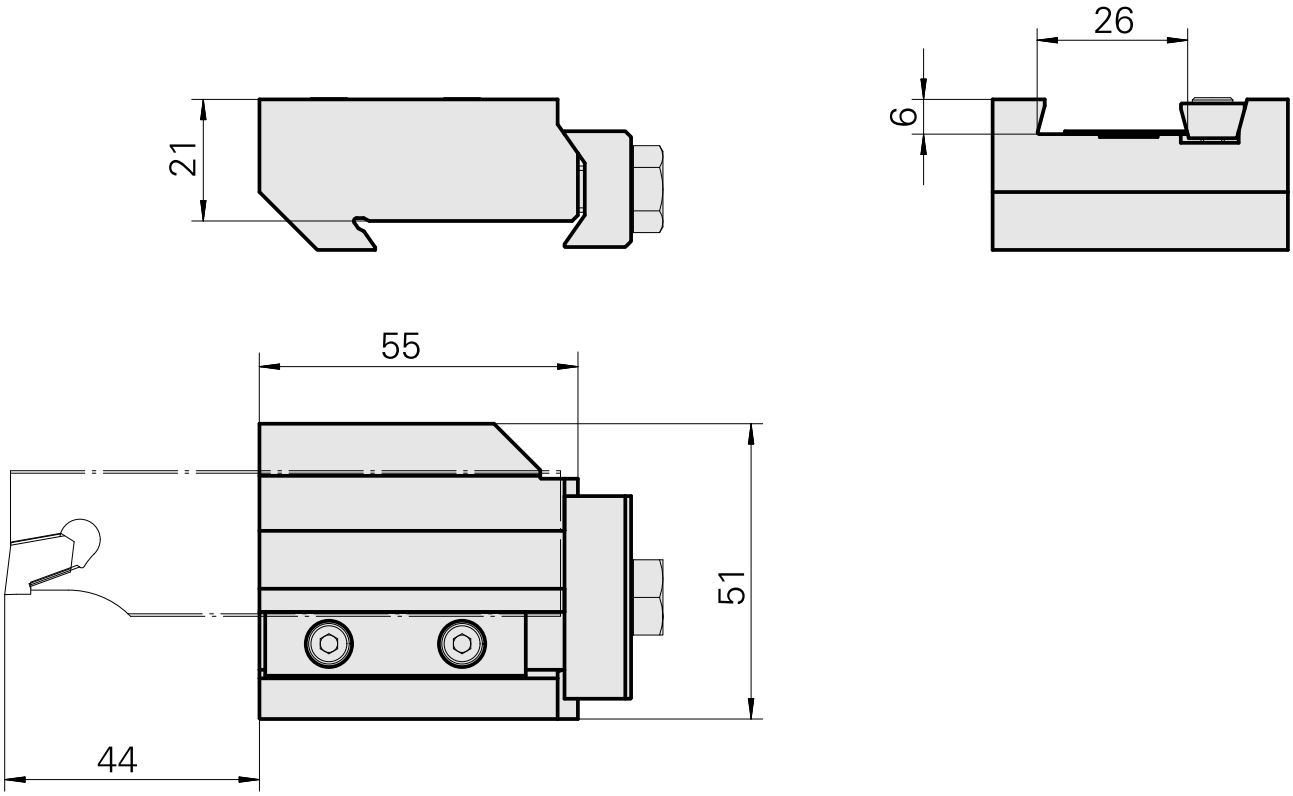

INDEX

Documents

No downloads available for this product