INDEX

Basic holder VDI 20, vertically adjustable

Technical data

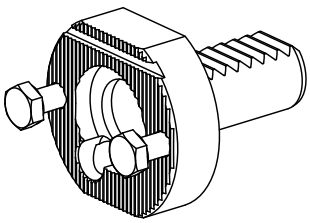

Shank VDI	VDI 20
Drive	not live
Fixation VDI	none
Pressure	20 bar
reversable 180°	no
Data carrier	check tool station bore
X [mm]	14 (0.55")
Y [mm]	–
Z [mm]	–

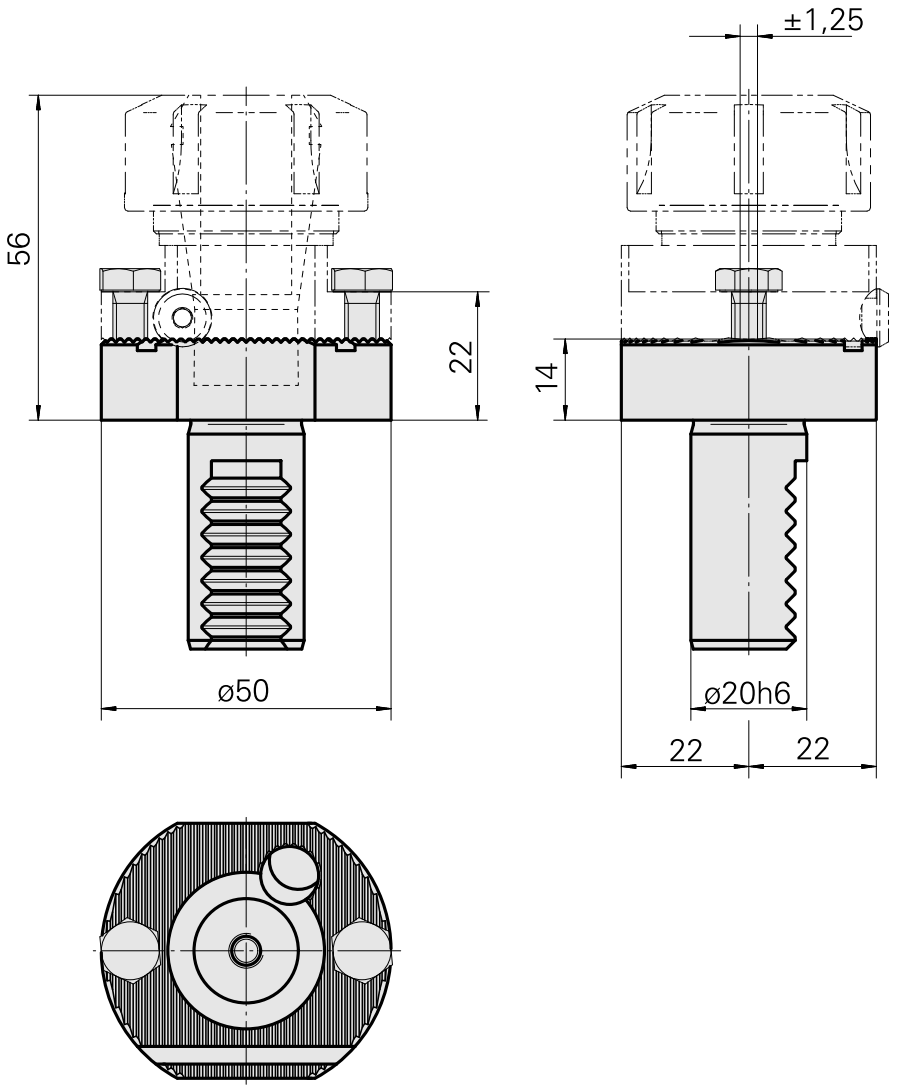

Documents

Product notes

DE (pdf)

FR (pdf)

EN (pdf)

Accessories

Optional accessories

Tool holders with VDI shank

Drill holding block D20 (0.79 ")

Product ID : 10099852
Previous product ID : W9990086

Drive	Cooling	Pressure	Mounting
not live	external	20 bar	D20
X [mm]	**Y [mm]**	**Z [mm]**	**INDEX TRAUB products**
40 (1.57")	–	–	C42/65 • G160 • G300 • A200-6 • ABC • C100 • C200 • G200 • G200.2 • G220 • G250 • ABC.2

Drill holding block ER25

Product ID : 10285739
Previous product ID : W9990085

Drive	Cooling	Pressure	Mounting
not live	internal	20 bar	ER25
X [mm]	**Y [mm]**	**Z [mm]**	**INDEX TRAUB products**
42.5 (1.67")	–	–	C42/65 • G160 • G300 • A200-6 • ABC • C100 • C200 • G200 • G200.2 • G220 • G250 • ABC.2