Drilling tool holder D20

Technical data

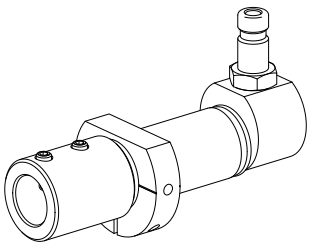

Drive	not live
Fixation MS	Clamping ring D28.5
Cooling	internal
Pressure	80 bar
Mounting	D20
X [mm]	–
Y [mm]	–
Z [mm]	–
INDEX TRAUB products	MS16-6 • MS22-6 • MS22-8 • MS24-6 • MS16-6 Plus

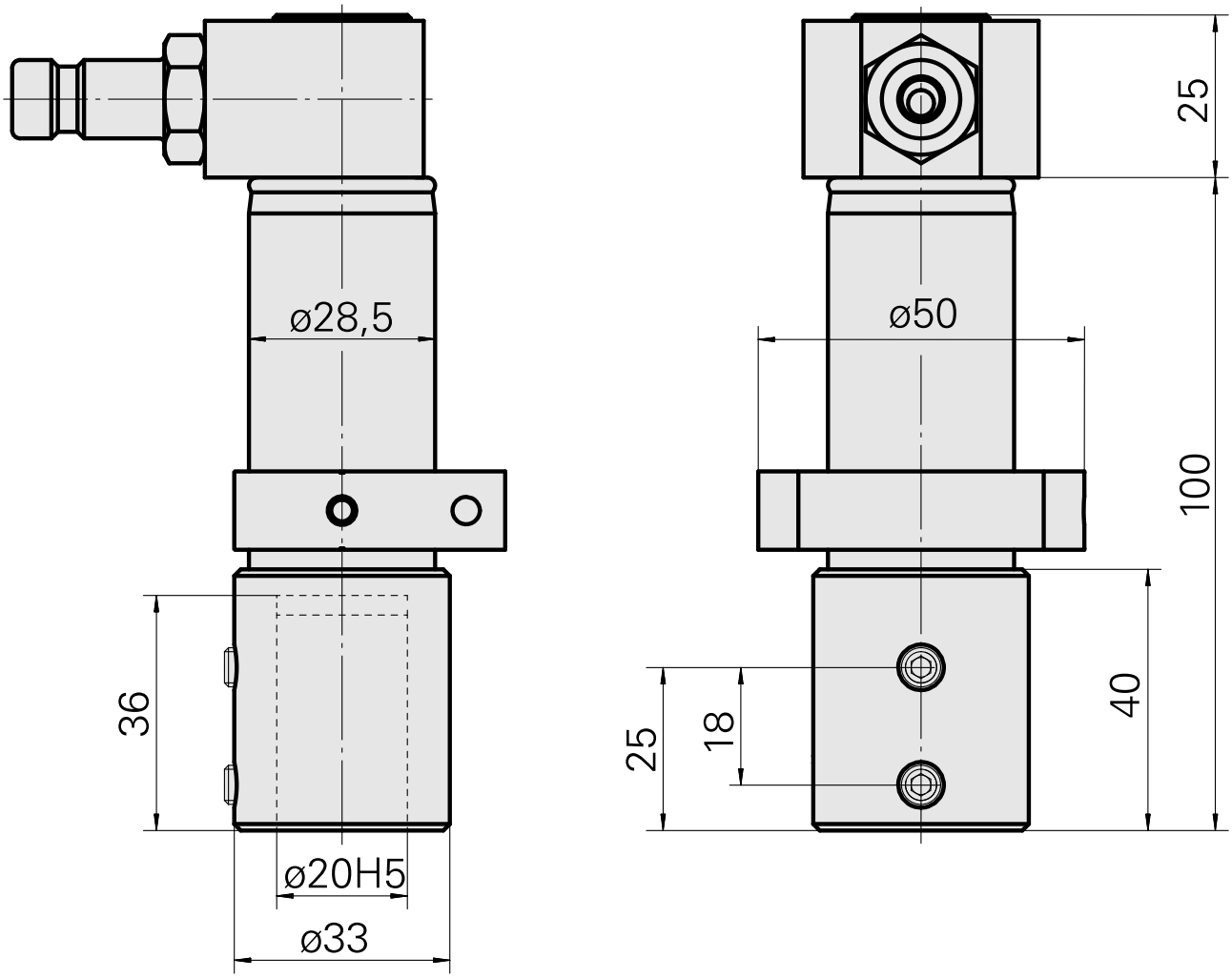

Documents

No downloads available for this product

Accessories

Optional accessories

Tool holder accessories

Mounting sleeve with collar D20/ 3mm

Product ID : 10908982
Previous product ID : W68511.0403

TH accessories category	Mounting	Tool mounting
Mounting sleeve with collar	D20	3mm

Mounting sleeve with collar D20/ 4mm

Product ID : 10215398
Previous product ID : W68511.0404

TH accessories category	Mounting	Tool mounting
Mounting sleeve with collar	D20	4mm

Mounting sleeve with collar D20/ 5mm

Product ID : 10832261
Previous product ID : W68510.0405

TH accessories category	Mounting	Tool mounting
Mounting sleeve with collar	D20	5mm

Mounting sleeve with collar D20/ 6mm

Product ID : 10048953
Previous product ID : W68510.0406

TH accessories category	Mounting	Tool mounting
Mounting sleeve with collar	D20	6mm

Mounting sleeve with collar D20/ 7mm

Product ID : 10224332
Previous product ID : W68510.0407

TH accessories category	Mounting	Tool mounting
Mounting sleeve with collar	D20	7mm

Mounting sleeve with collar D20/ 8mm

Product ID : 10184191
Previous product ID : W68510.0408

TH accessories category	Mounting	Tool mounting
Mounting sleeve with collar	D20	8mm

Mounting sleeve with collar D20/ 10mm

Product ID : 10258187
Previous product ID : W68510.0410

TH accessories category	Mounting	Tool mounting
Mounting sleeve with collar	D20	10mm

Mounting sleeve with collar D20/ 11mm

Product ID : 11010085
Previous product ID : W68510.0411

TH accessories category	Mounting	Tool mounting
Mounting sleeve with collar	D20	11mm

Mounting sleeve with collar D20/ 12mm

Product ID : 10584331
Previous product ID : W68510.0412

TH accessories category	Mounting	Tool mounting
Mounting sleeve with collar	D20	12mm

Mounting sleeve with collar D20/ 14mm

Product ID : 10681512
Previous product ID : W68510.0414

TH accessories category	Mounting	Tool mounting
Mounting sleeve with collar	D20	14mm

Mounting sleeve with collar D20/ 15mm

Product ID : 10804219
Previous product ID : W68510.0415

TH accessories category	Mounting	Tool mounting
Mounting sleeve with collar	D20	15mm

Mounting sleeve with collar D20/ 16mm

Product ID : 10324366
Previous product ID : W68510.0416

TH accessories category	Mounting	Tool mounting
Mounting sleeve with collar	D20	16mm

Other accessories

QUICK COUPLING SP-006-0-WR513-11-2 Serie LP

Product ID : 10837142
Previous product ID : 474940.0112

INDEX

QUICK DISCONNECT FITTING SP-006-1-WR013-11 Serie LP

Product ID : 10186287
Previous product ID : 474946.25