INDEX

tube, M6x48,45°

Technical data

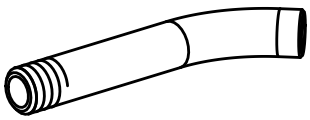

TH accessories category	Cooling lubricant tube
Mounting	M6

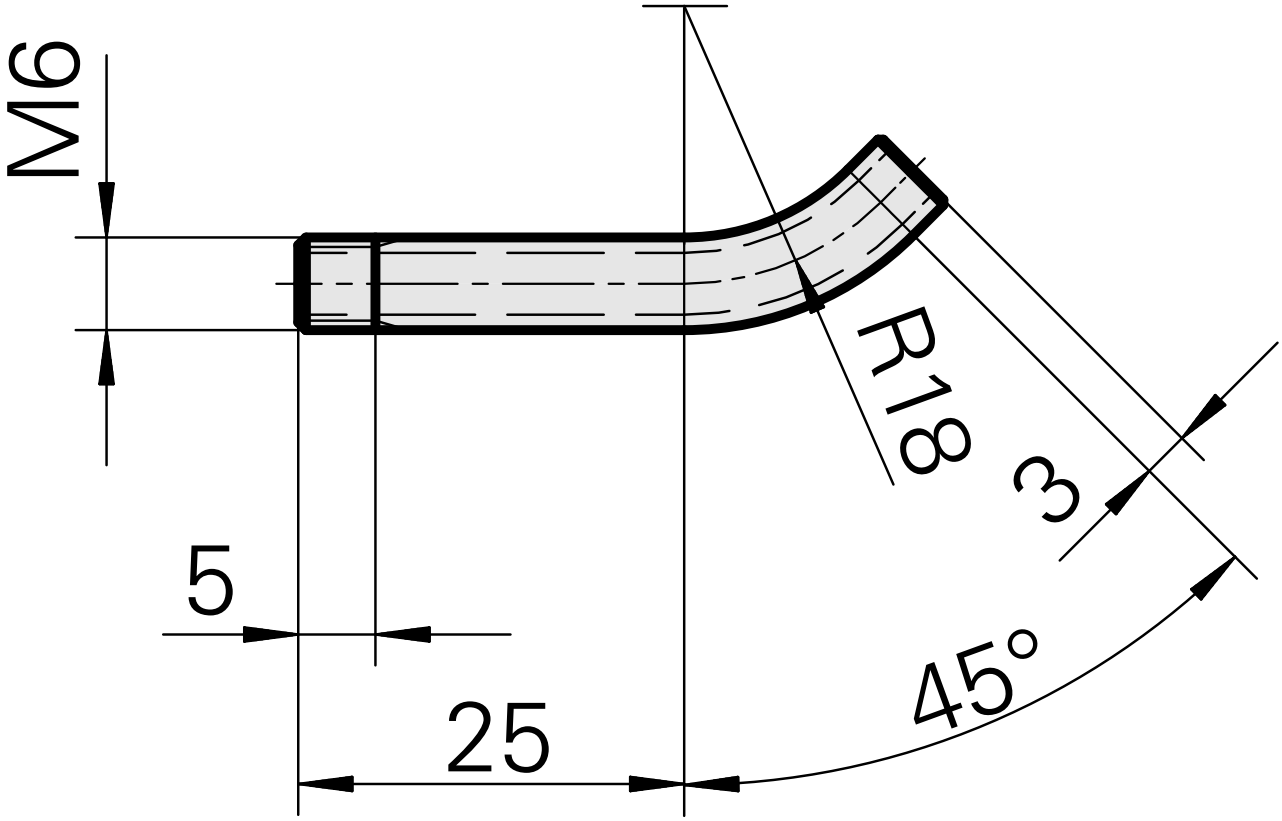

Documents

No downloads available for this product