Drilling tool holder ER20

Technical data

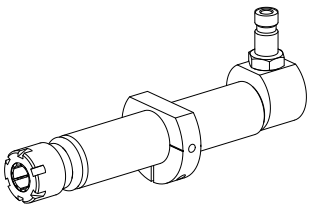

Drive	not live
Fixation MS	Clamping ring D28.5
Cooling	internal
Pressure	80 bar
Mounting	ER20
X [mm]	–
Y [mm]	–
Z [mm]	–
INDEX TRAUB products	A100 • MS16-6 • MS22-6 • MS22-8 • MS24-6 • MS16-6 Plus

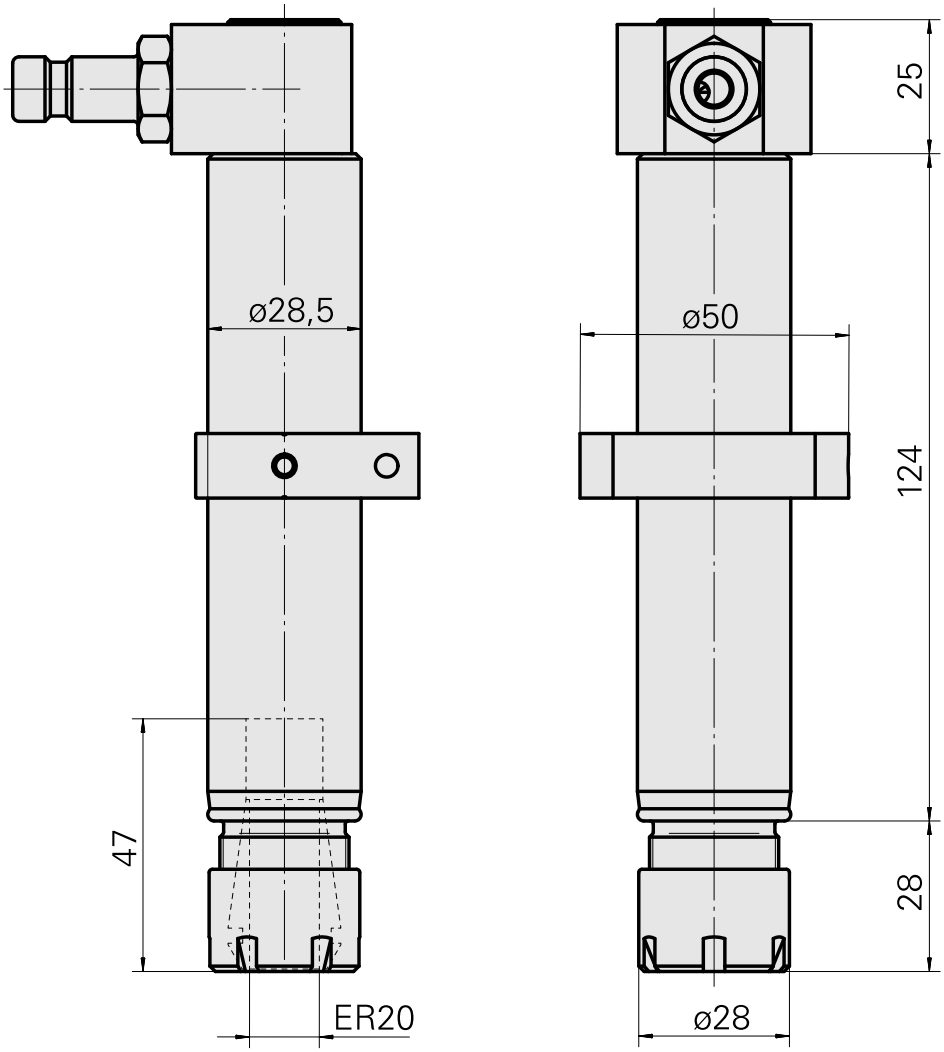

Documents

No downloads available for this product

Accessories

Required for operation

Spanner

Product ID : 10195062
Previous product ID : 490219.2201

TH accessories category	Mounting	Collet type	Clamping nut type
Tool	ER20	ER 20	Female thread diameter reduced
Tools for Collet chucks			
Clamping nut wrench			

Optional accessories

Tool holder accessories

Clamping nut

Product ID : 10435531
Previous product ID : 901939.2201

TH accessories category	Mounting	Collet type	Clamping nut type
Clamping nut	ER20	ER 20	Female thread diameter reduced

Other accessories

Clamping collet

Product ID : 10863981
Previous product ID : 901930.2---

tapping tool collet ET-1-20

Product ID : 10418139
Previous product ID : 3234--

Collet chuck

Product ID : 10135002
Previous product ID : W999066-

Clamping collet, sealed

Product ID : 10919110
Previous product ID : W999084-

QUICK COUPLING SP-006-0-WR513-11-2 Serie LP

Product ID : 10837142
Previous product ID : 474940.0112

QUICK DISCONNECT FITTING SP-006-1-WR013-11 Serie LP

Product ID : 10186287
Previous product ID : 474946.25