10393834
900465.1900

INDEX

# Clamping head SK65 D=19,00mm

## Technical data

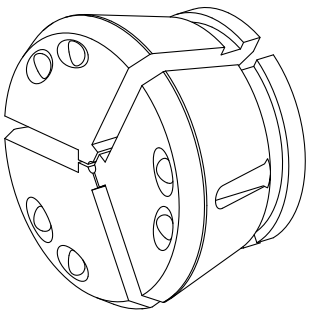

| | |
|---|---|
| **Clamping device size** | SK65 |
| **manufacturer product line** | SPANNTOP nova chuck |
| **Clamping type** | grooved |
| **Nominal diameter (mm)** | 19 Millimeter |
| **Clamping method** | External clamping |
| **manufacturer product line** | Hainbuch |

No 3-side view is currently available for this product

## Documents

No downloads available for this product