INDEX

Clamping collet 145E/F25 Ø=15,00

Technical data

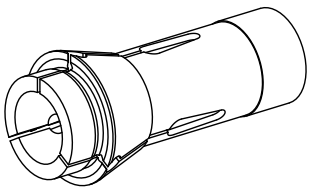

Clamping device size	145E/F25
manufacturer product line	
Clamping type	grooved
Nominal diameter (mm)	15 Millimeter
Clamping method	External clamping
Collet version	Slots vulcanized (standard)
manufacturer product line	Schlenker

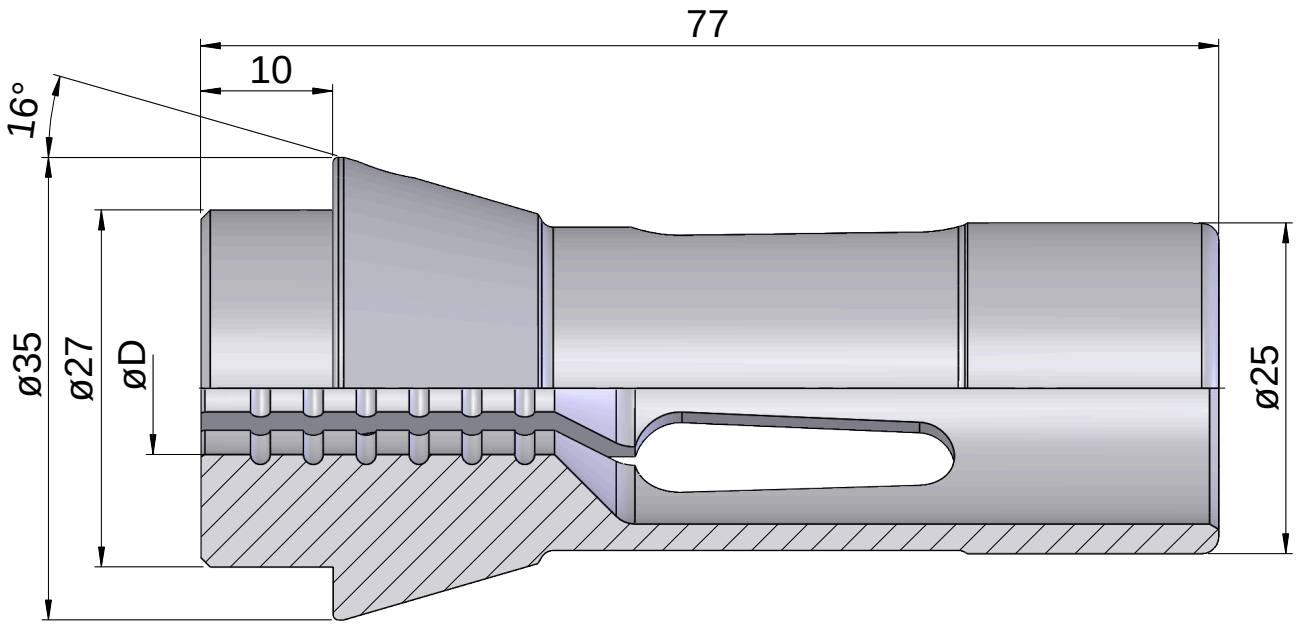

Documents

No downloads available for this product