INDEX

Adapter mounting aid WFB 20-12

Technical data

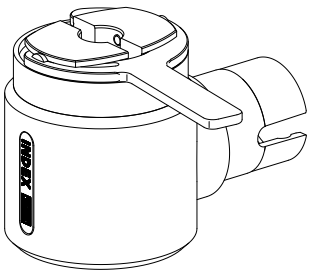

TH accessories category	Adapter mounting aid
Tool mounting	WFB 20-12

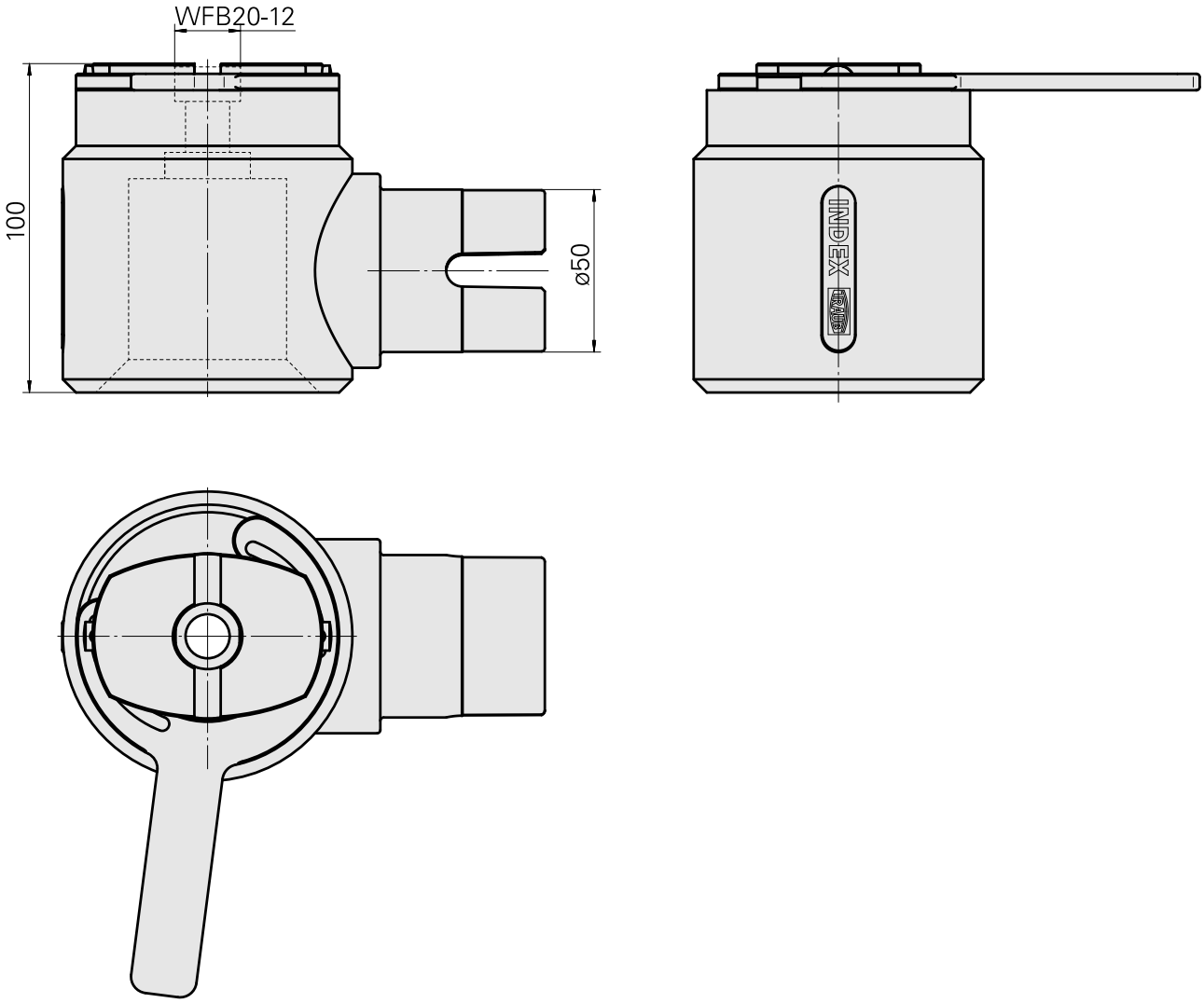

Documents

No downloads available for this product