INDEX
TRAUB

INDEX MS40-6

Tool holder Technical Information

*better.parts.**faster.***

Note on applicability

Illustrations in this publication may deviate from the product supplied. Errors and omissions due to technical progress expected.

A word on copyright

Tool holder selection

For more information, please visit our iXshop
at ixshop.index-traub.com

We will be happy to send you an individual offer.
Just call us at +49 711 3191-9854 or
send us an email to werkzeughalter@index-werke.de.

Warranty

When using tool holders that are not adjusted, tested and marked as such by INDEX TRAUB, the warranty for the tool drive is void.

Information on wear parts

Tool holders are wear parts requiring correct handling.
In order to ensure a long service life, compressed air or coolant must not enter the gap seals of the holders.

Inspection of live tool holders

Tool holders must be inspected at regular intervals (at least twice a year) for smooth running and play.

The drive pinion and drive clutch of the live tool holders must be subjected to a visual inspection for damage or wear.

If one of the above-mentioned defects is detected during the inspection of the tool holders, they must be returned immediately for preventive maintenance or repair to the following address:

INDEX-Werke GmbH & Co. KG
Hauffstraße 4
D-73262 Reichenbach
Fon +49 711 3191-554
werkzeughalter@index-werke.de

Tool holders with cooling lubricant supply

Tool holders marked with this symbol must be operated with cooling lubricant (no dry running permitted).

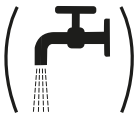

Tool holders marked with this symbol can be converted from external cooling lubricant supply to internal cooling lubricant supply.
Observe dry running capability of IC attachment!

Cooling lubricant filtering

When using live tool holders with internal cooling lubricant supply, it is necessary to use a cooling lubricant filter system with a retained particle size ≤ 50 µm.

Cleaning live tool holders

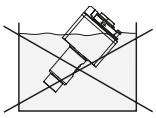

Live tool holders must never be immersed in cleaning fluid since mixing the cleaning fluid with the bearing grease will reduce the service life of the tool holders.

Speed ratio specifications on tool holders

The value to be programmed is specified in the documentation and on the live tool holders (= the input in the NC program).

$n_{prog} = n_{Tool} \times i$

n_{Tool} = speed at the cutting tool edge

n_{PROG} = speed to be programmed

i = speed ratio in the tool holder

This means the speed increase or speed reduction is not specified as a fraction but as **a number**.

This gives speed **increase** ratios as numbers **less than 1**.
Example: i = 0.333 (corresponds to i = 1:3)
i = 0.676 (corresponds to i = 1:1.48)

Speed reduction ratios are numbers greater than 1.
Example: i = 2 (corresponds to i = 2:1)
i = 1.333 (corresponds to i = 4:3)

Direction of rotation specification

Definition of the viewing direction.
Viewing direction for determining the direction of rotation is always from behind (that is, from the drive direction) toward the shaft.

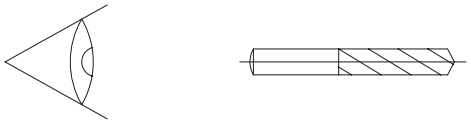

On the machine side, the direction of rotation has been set by parameters such that M03 always denotes clockwise rotation and M04 counter-clockwise rotation at the interface of the drive pinion of the tool holder.

The direction of rotation given on the holder therefore refers to a "change in direction within the holder". M03 and M04 are machine functions to be programmed. The and arrows indicate the direction of rotation of the cutting edges.

This means:

M03 M04

No reversal of direction of rotation
When the holder drive shaft has the **same** direction of rotation as the tool cutting edge, the clockwise direction of run must be specified by M03 (clockwise rotation). Accordingly, counter-clockwise rotation must be specified by M04.

M04 M03

Reversal of direction of rotation
When the holder drive shaft has the **opposite** direction of rotation as the tool cutting edge, the clockwise direction of rotation must be specified by M04. Accordingly, counter-clockwise rotation must be specified by M03.

Example

No reversal of direction of rotation

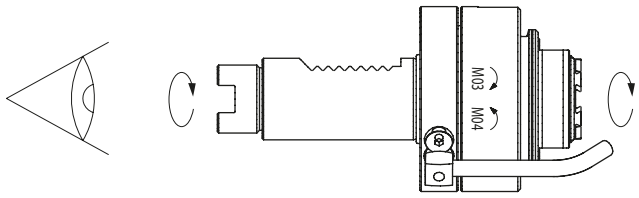

Tightening torque

The tightening torques of the clamping pieces to the tool holder mounting depends on the shank diameter of the tool holder.

Shank size	Tightening torque
Ø 20mm	8 Nm
Ø 25mm	20 Nm
Ø 30mm	25 Nm
Ø 40mm	40 Nm

Replacement seals for tool shank

The gaskets on the tool shank and the cooling lubricant bushing must be regularly checked for damages.

O-ring	O-ring color	Material number	Installation location
ø23.52 x 1.78	Green	10823023	Shank ø25
ø9.75 x 1.78	Green	10046965	Cooling lubricant adapter

The color of the reordered O-ring must always be the same as the one already used on the tool shank.

Tool holders with fixation

Except for very few cases, all tool holders have been pre-adjusted with high precision and sealed with the INDEX V bar / TRAUB adjusting bar / W-serration.
This setting must not be changed.

The INDEX V bar / TRAUB adjusting bar / W-serration ensures positional accuracy of the tool when re-inserted.

The tool holders are fixed around the shank axis by pins (DIN 69880).

DIN holders can be used.

Double serration of the tool holders allows several uses.

Load limits of live tools

The drive power and torques are indicated in the performance charts. These values represent the upper limit of the calculated theoretical performance values (average values). In case of interrupted cuts, e.g., for milling, the load peaks occurring when the cutting edge enters the material may be much higher than the theoretical torque according to the performance chart.

The cutter should be selected so that a cutting edge is constantly being used for cutting during the machining process.

Notes on how to use the chart when using tool holders

The diagram relates to the output speed **n** of the tool unit. The tool speed can be read directly from the diagram only if the internal speed ratio **i** in the tool holder is 1:1.

For tool holders with an internal speed ratio i ≠ 1, the output speed **n** of the tool unit to be programmed must be calculated from the required tool speed and the speed ratio **i**. Afterwards, the actual powers or torques can be read off or determined.

Example (at 100% duty cycle):

live tool unit, tool speed n_{tool} = 1000 rpm	
Internal speed ratio i of the tool holder	i = 4
Programmed speed n_{prog} for the drive of the unit	$n_{prog} = n_{tool} \times i$ = 1000 rpm x 4 = 4000 rpm
Torque M_{tool} at the output of the tool holder	Read-out M_d at speed n_{prog} = 4000 rpm = 1.6 Nm $M_d = M_{tool} : i$ Formula changed: $M_{Tool} = M_d \times i$ = 1.6 Nm x 4 = 6.4 Nm
Power P at the output of the tool holder ≈ Power P at the output of the setup	Read-out at 4000 rpm –> P = 0.67 kW calculated: $P = 2 \times \pi \times n_{prog} \times M_d$ $P = \frac{2 \times \pi \times 4000 \times 1.6\ Nm}{60 \times 1000} = 0.67\ kW$

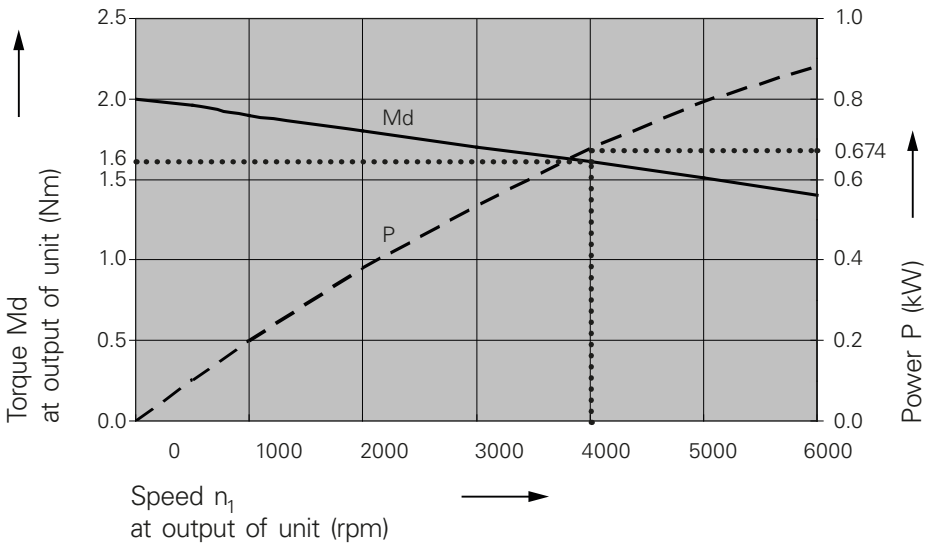

The speed ratio and the technical data of each tool holder are indicated on the next pages.

Machine concept of the INDEX MS40-6

Full configuration

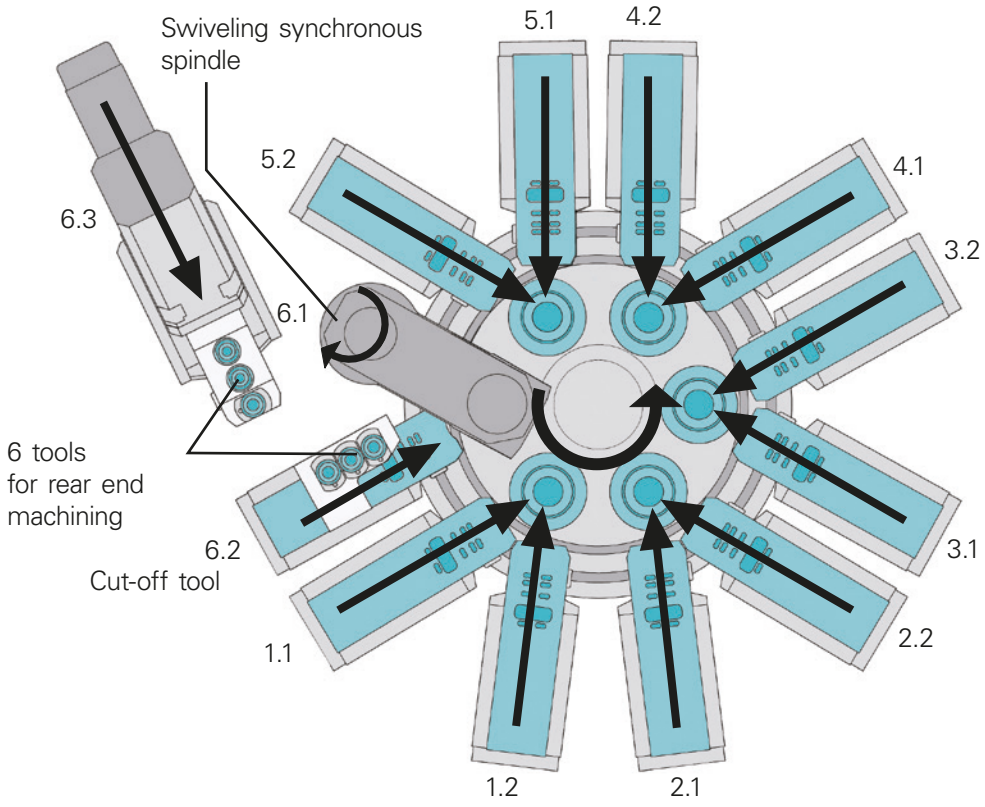

- 12 tool carriers with 1 or 2 travel axes
- Rear End Machining unit with 3 tools, max. 2 live
- Multiple tooling of the slides possible
- Only the tool holders determine the machining direction (internal or external)
- Transverse machining with live tools
- Cut-off side machining with up to 6 tools

Machine concept of the INDEX MS40-6

Double three-spindle machine

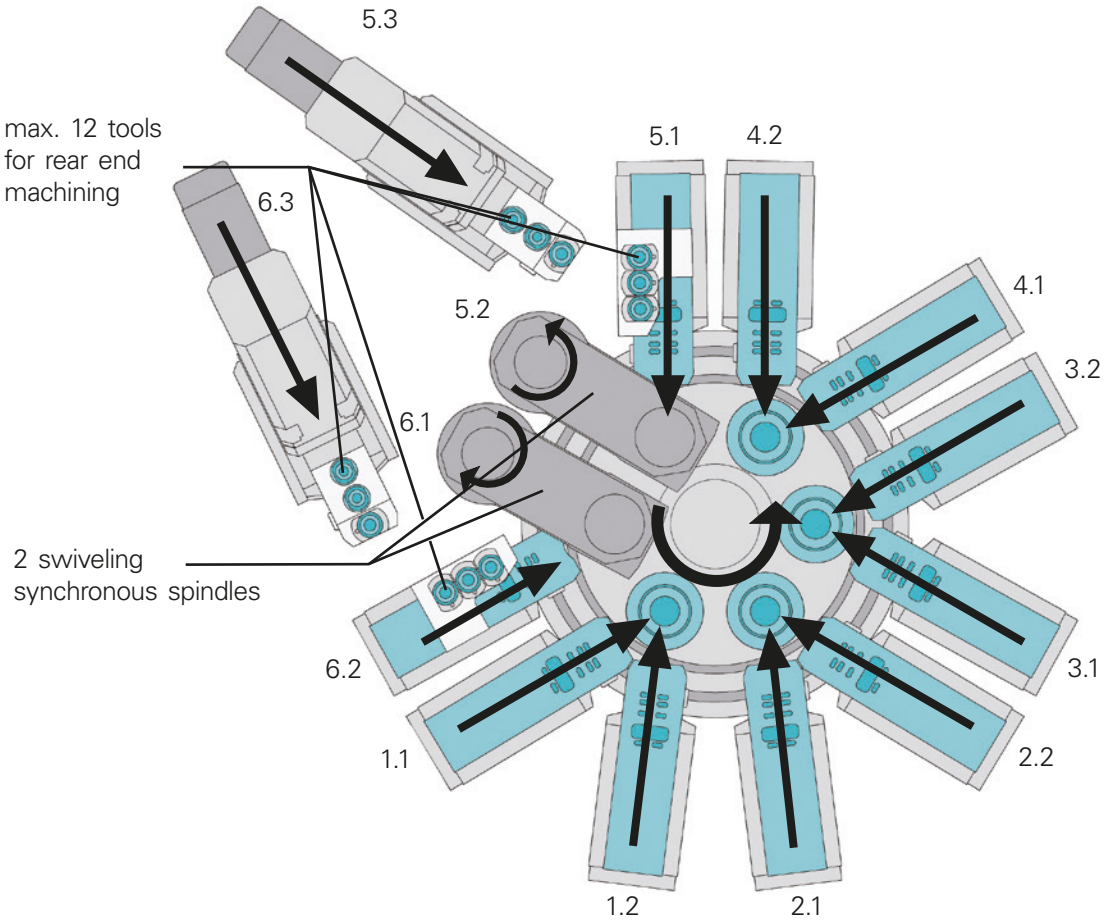

- 12 tool carriers with 1 or 2 travel axes
- 2 swiveling synchronous spindles
- 6 fixed stations for rear-end machining
- 2 Rear End Machining units with additional 3 tools, max. 2 of each are live
- Multiple tooling of the slides possible
- Only the tool holders determine the machining direction (internal or external)
- Transverse machining with live tools

Travel of cross slide unit INDEX MS40-6

Cross slide unit X NC 1.1, 1.2, 2.1, 2.2, 3.1, 3.2, 4.1, 4.2, 5.1, 5.2, 6.1, 6.2

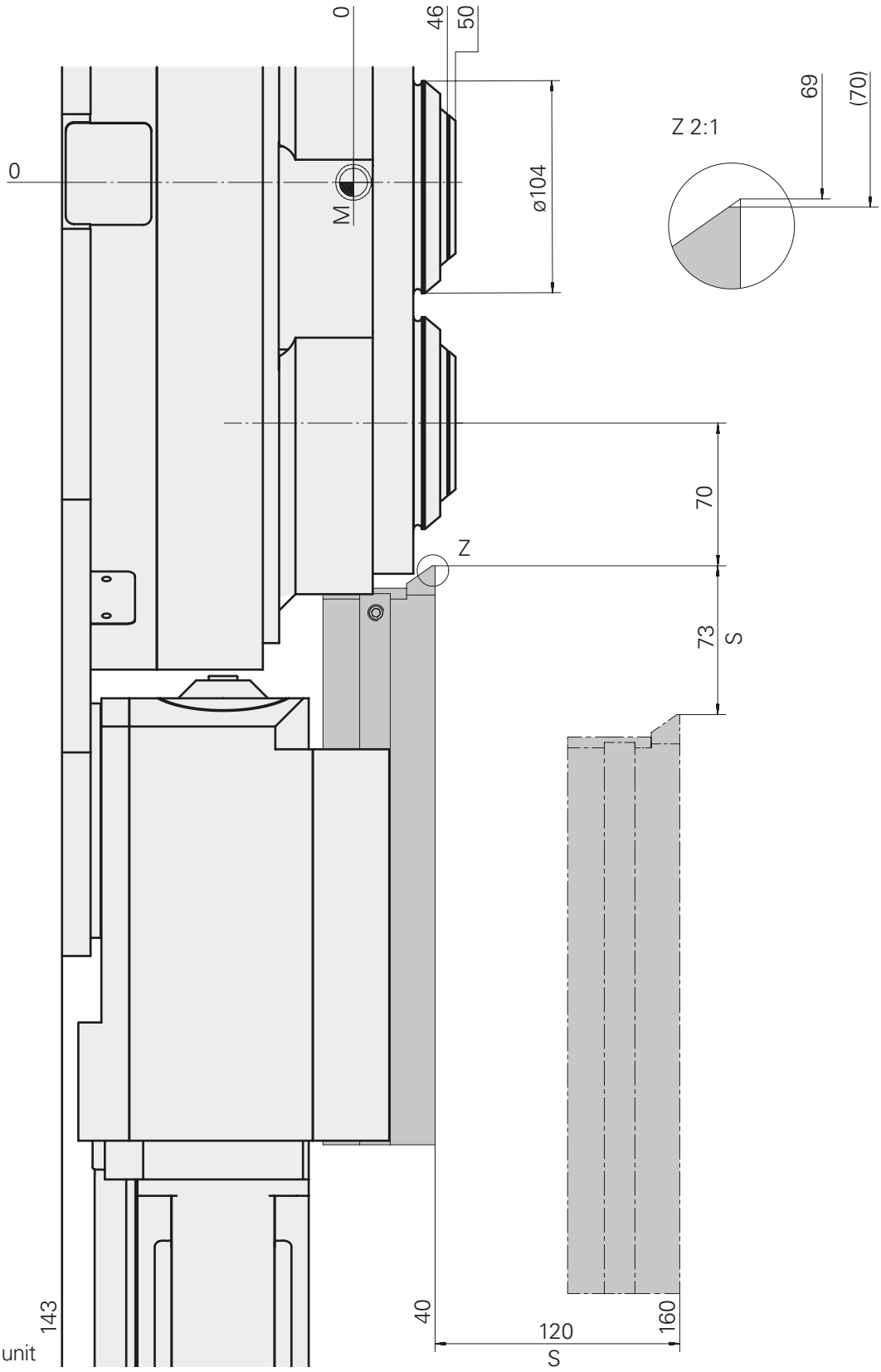

S = travel of cross slide unit

Travel of cross slide unit INDEX MS40-6

Cross slide unit X rigid 1.1, 1.2, 2.1, 2.2, 3.1, 3.2, 4.1, 4.2, 5.1, 5.2

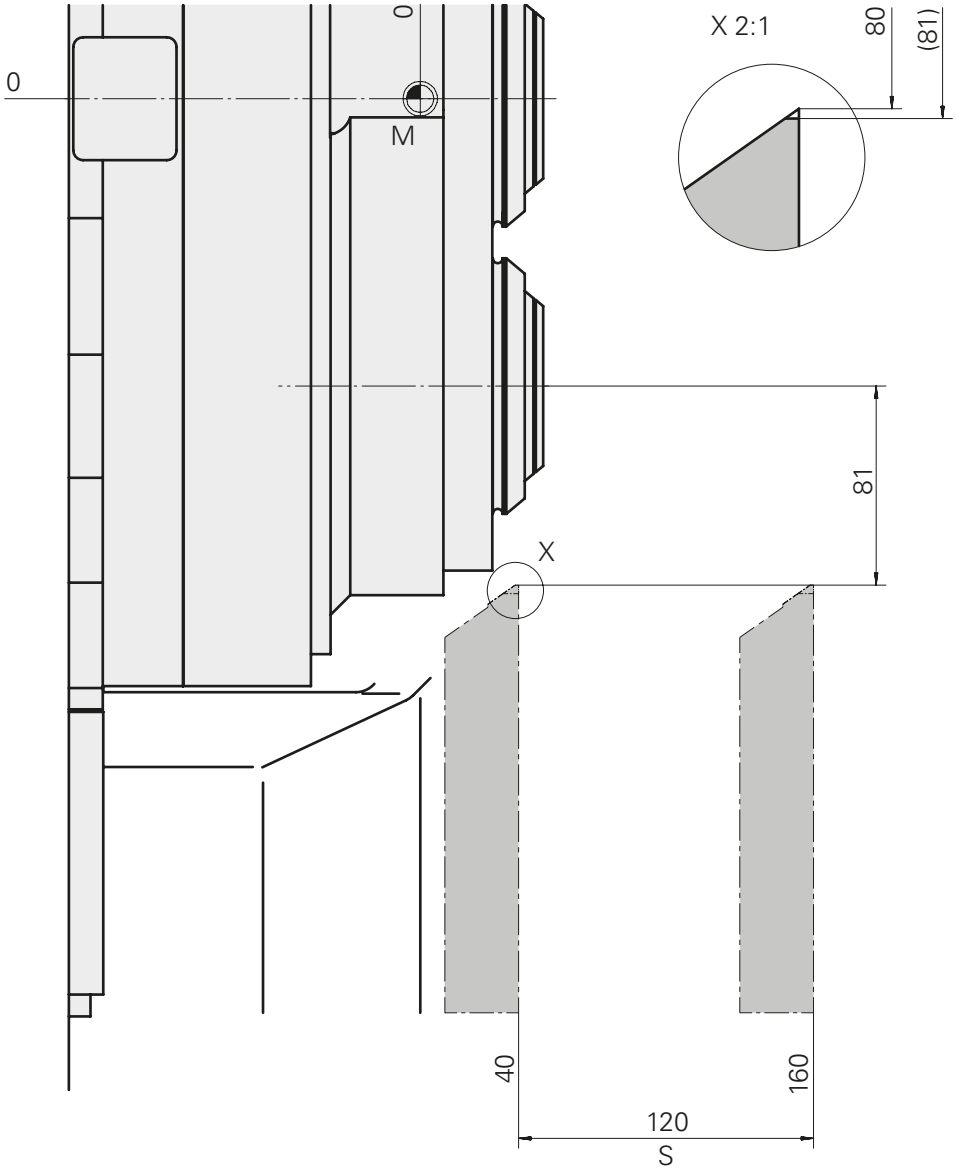

S = travel of cross slide unit

Synchronized spindle INDEX MS40-6

Rear End Machining on Rotation Axis 6.1

Rear End Machining Tools on Cross Slide Unit 6.2

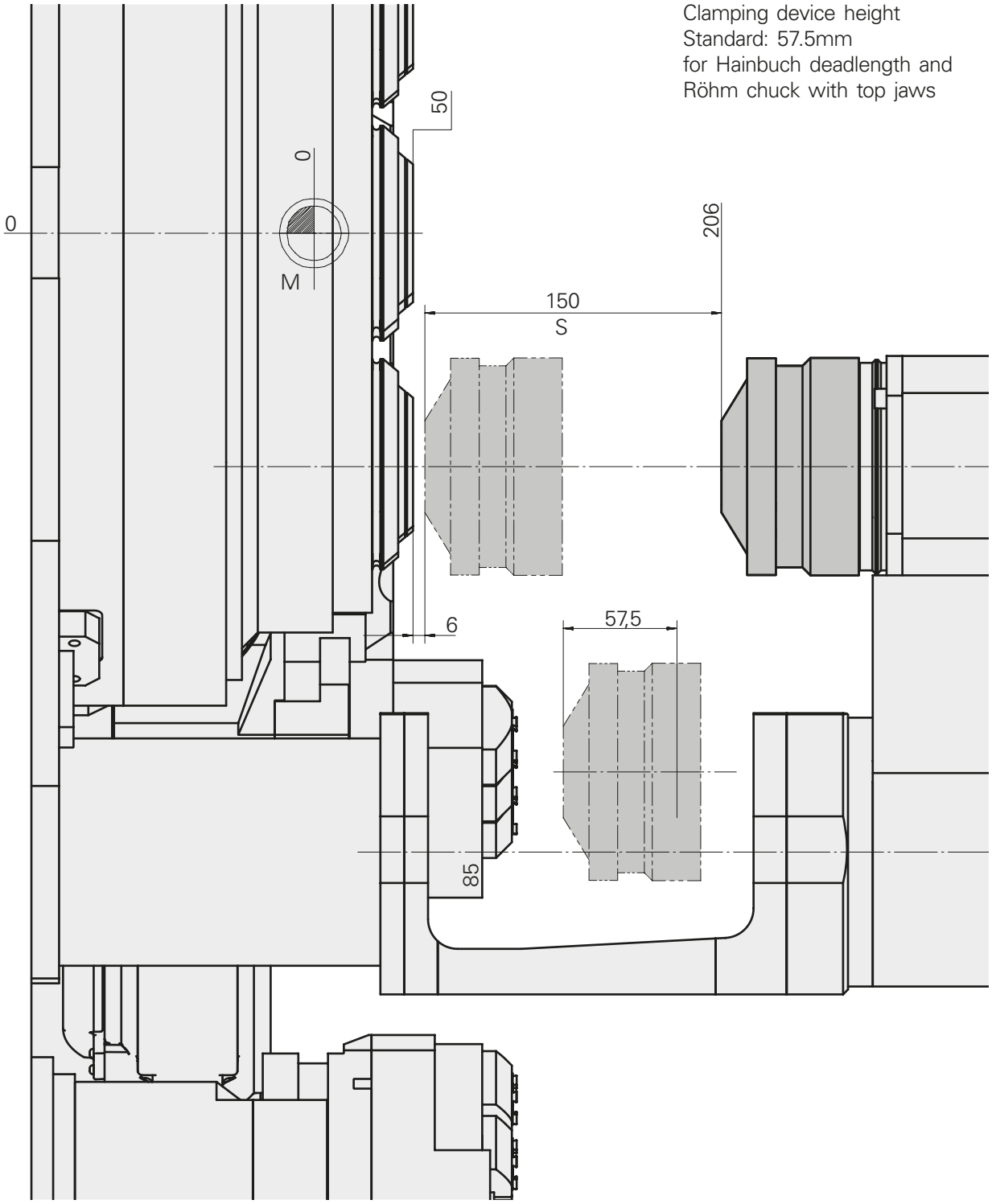

S = travel of cross slide unit

INDEX TRAUB

Synchronized spindle INDEX MS40-6

Rear end machining on swivel axis 6.1, 5.2

Rear end machining unit on cross slide unit 6.2, 6.3, 5.1, 5.3

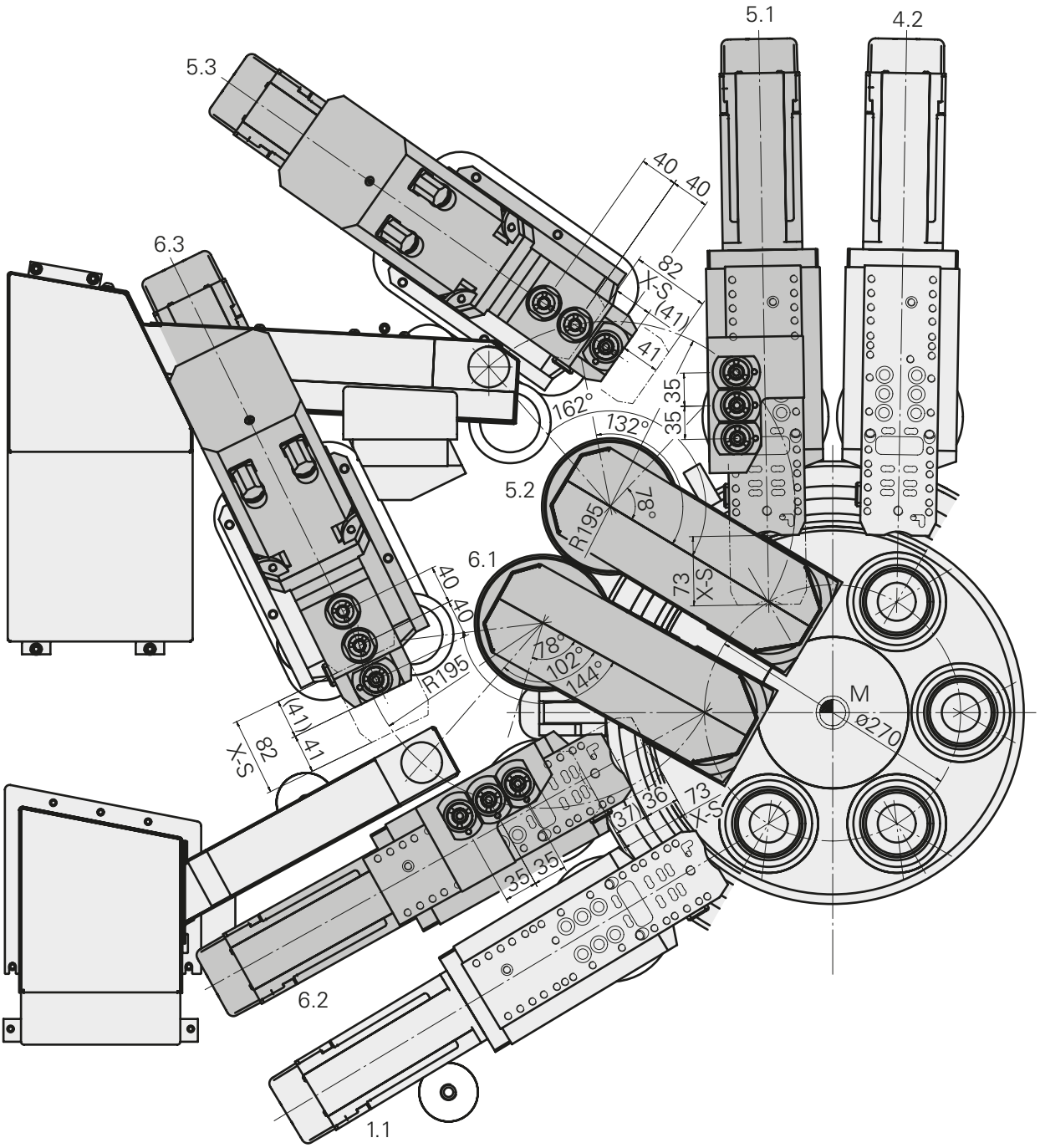

Y axis INDEX MS40-6

Attachable to cross slide unit 1.1, 2.2, 3.1, 4.1, 4,2, 5.1, 5.2, 6.2

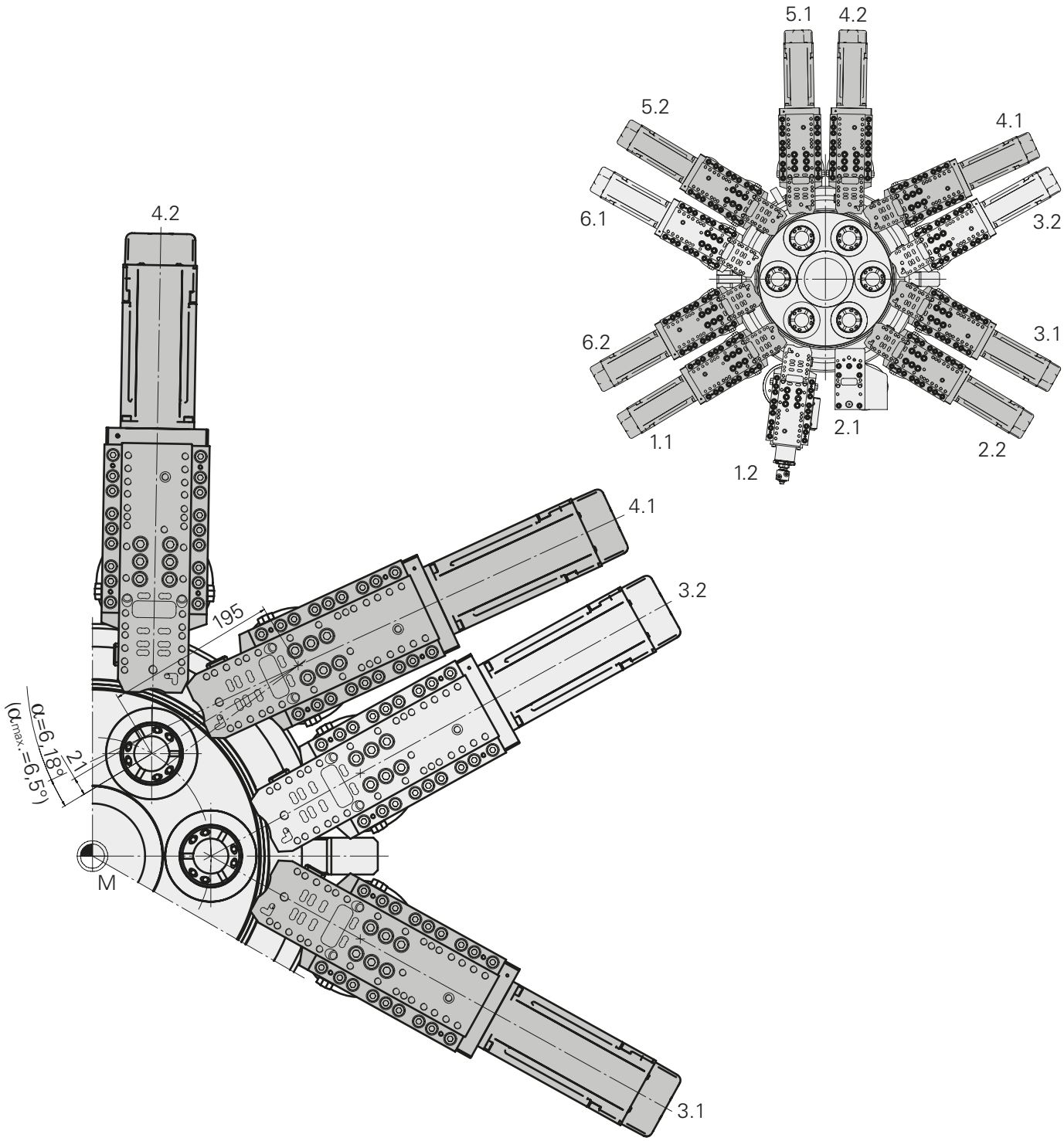

α=0,79618° per motor revolution

Tool drive unit shank VDI25, INDEX MS40-6

Cross slide unit 1.1 - 6.2

Installation size, Mounting options

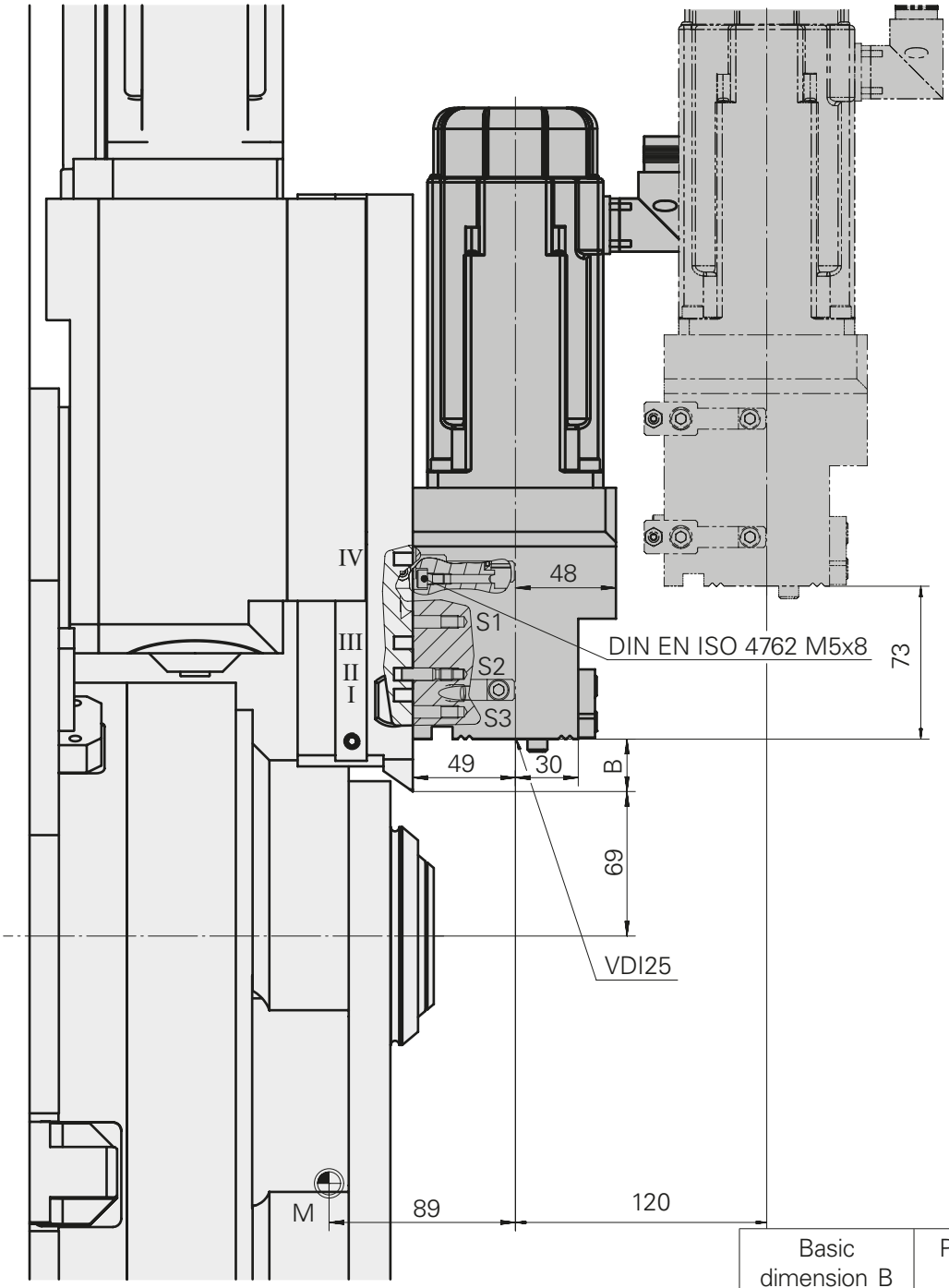

Basic dimension B	Pin position	Slot of cross slide unit
0 mm	S1	II
15 mm	S1	III
25 mm	S2	II
40 mm	S2	III
55 mm	S1	IV

S1-S3 = screw pair
(S3 is not required on this machine)
I, II, III, IV = cross slide slot

Tool drive unit reinforced shank VDI25, INDEX MS40-6

Cross slide unit 1.1 - 6.2

Installation size, Mounting options

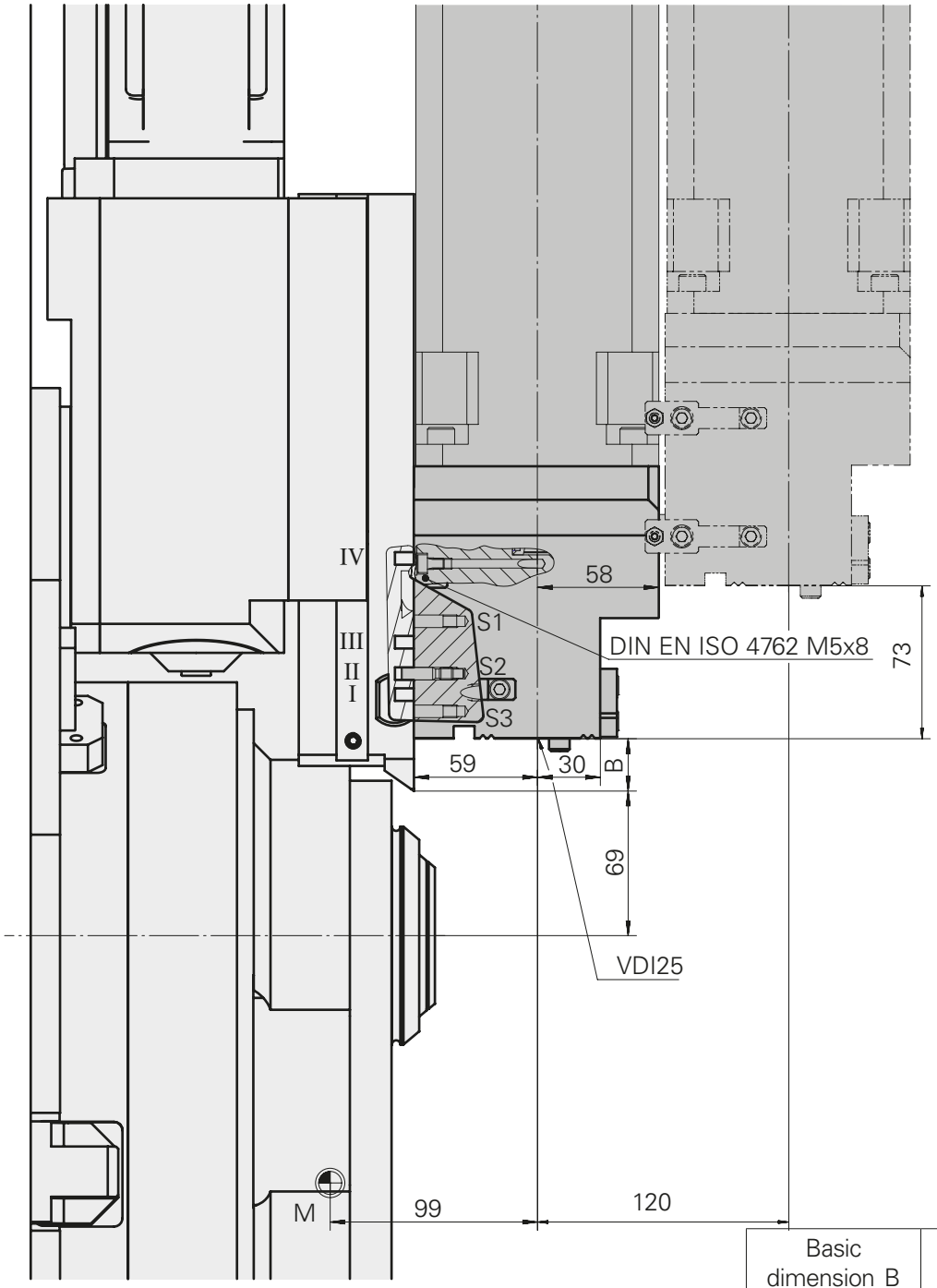

Basic dimension B	Pin position	Slot of cross slide unit
0 mm	S1	II
15 mm	S1	III
25 mm	S2	II
40 mm	S2	III
55 mm	S1	IV

S1-S3 = screw pair
(S3 is not required on this machine)
I, II, III, IV = cross slide slot

Cross slide unit INDEX MS40-6

X-NC 1.1 - 6.2

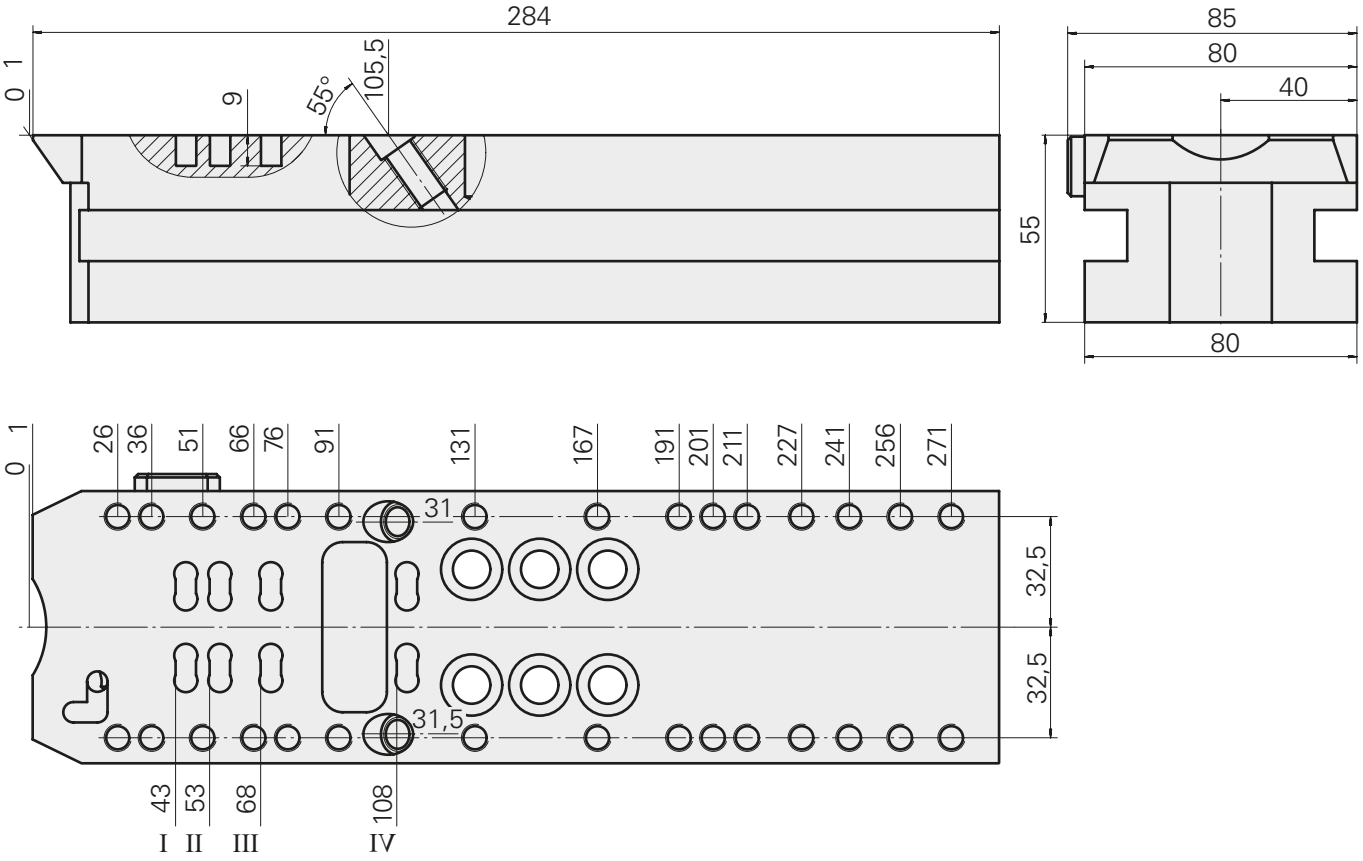

I, II, III, IV = cross slide slot

Cross slide unit INDEX MS40-6

X-NC 5.3/6.3

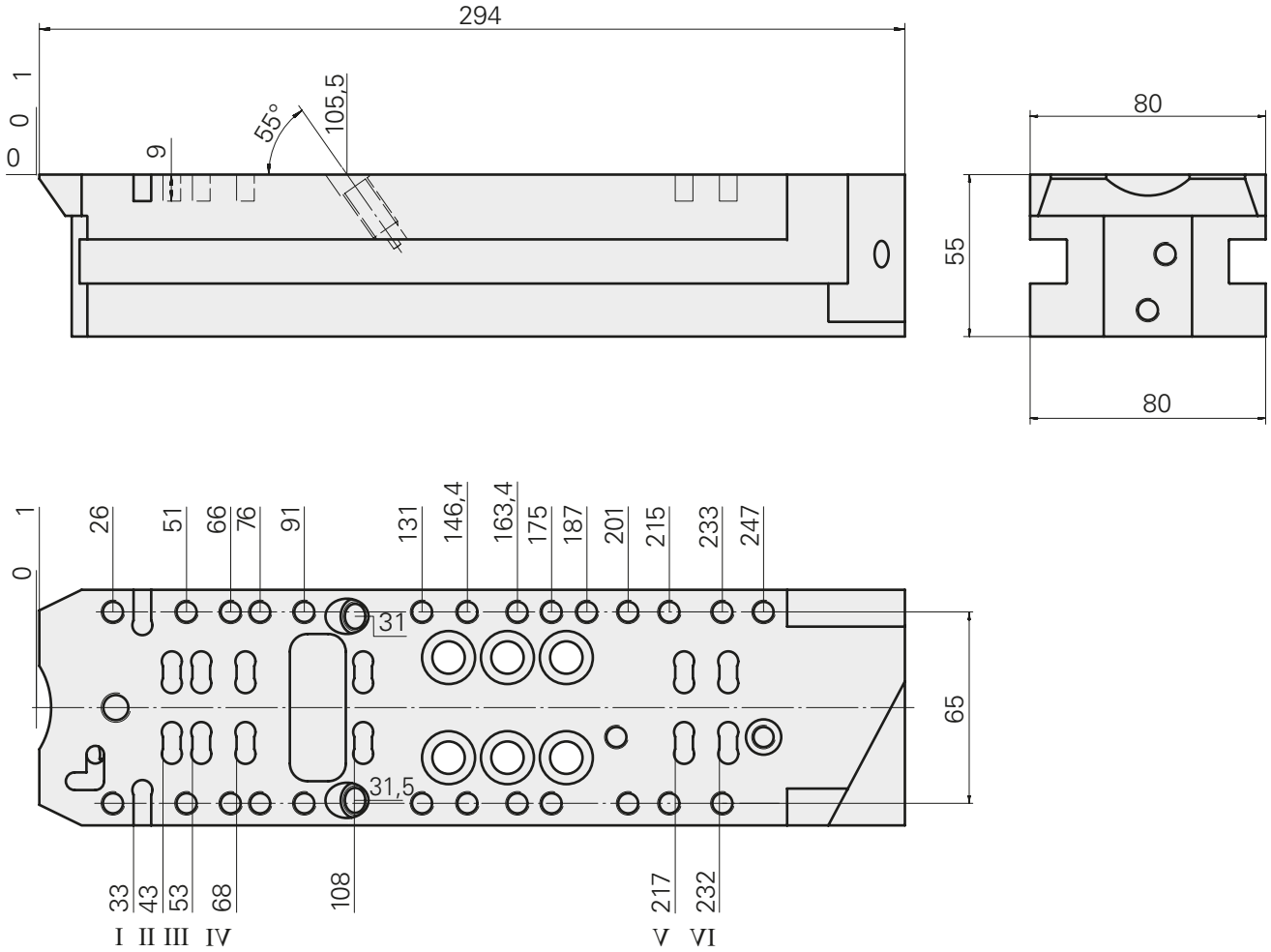

I, II, III, IV = cross slide slot

Modular design of INDEX MS40-6

Grooving tool holder

Cross slide unit 1.1 - 6.2, machining in X/Z direction

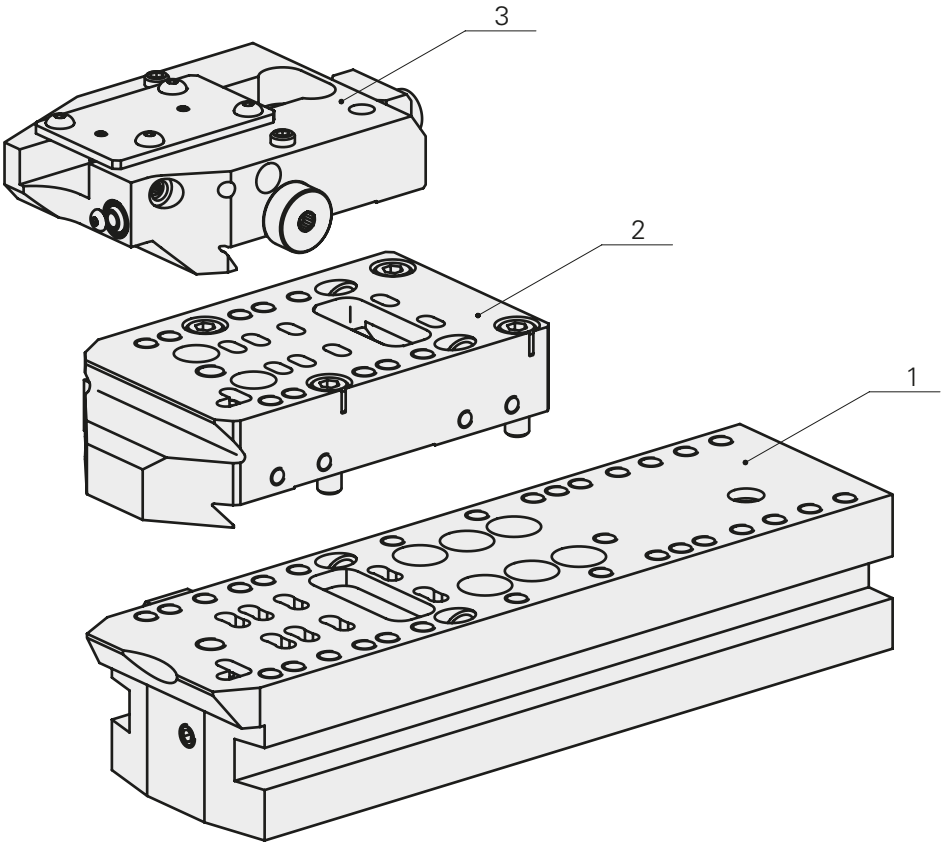

1 Cross slide unit 1.1 - 6.2
2 Intermediate plate as needed
3 Grooving tool holder

Modular design of INDEX MS40-6

Base holder with drill holder D36mm / D51mm

Cross slide unit 1.1 - 6.2, machining in X/Z direction

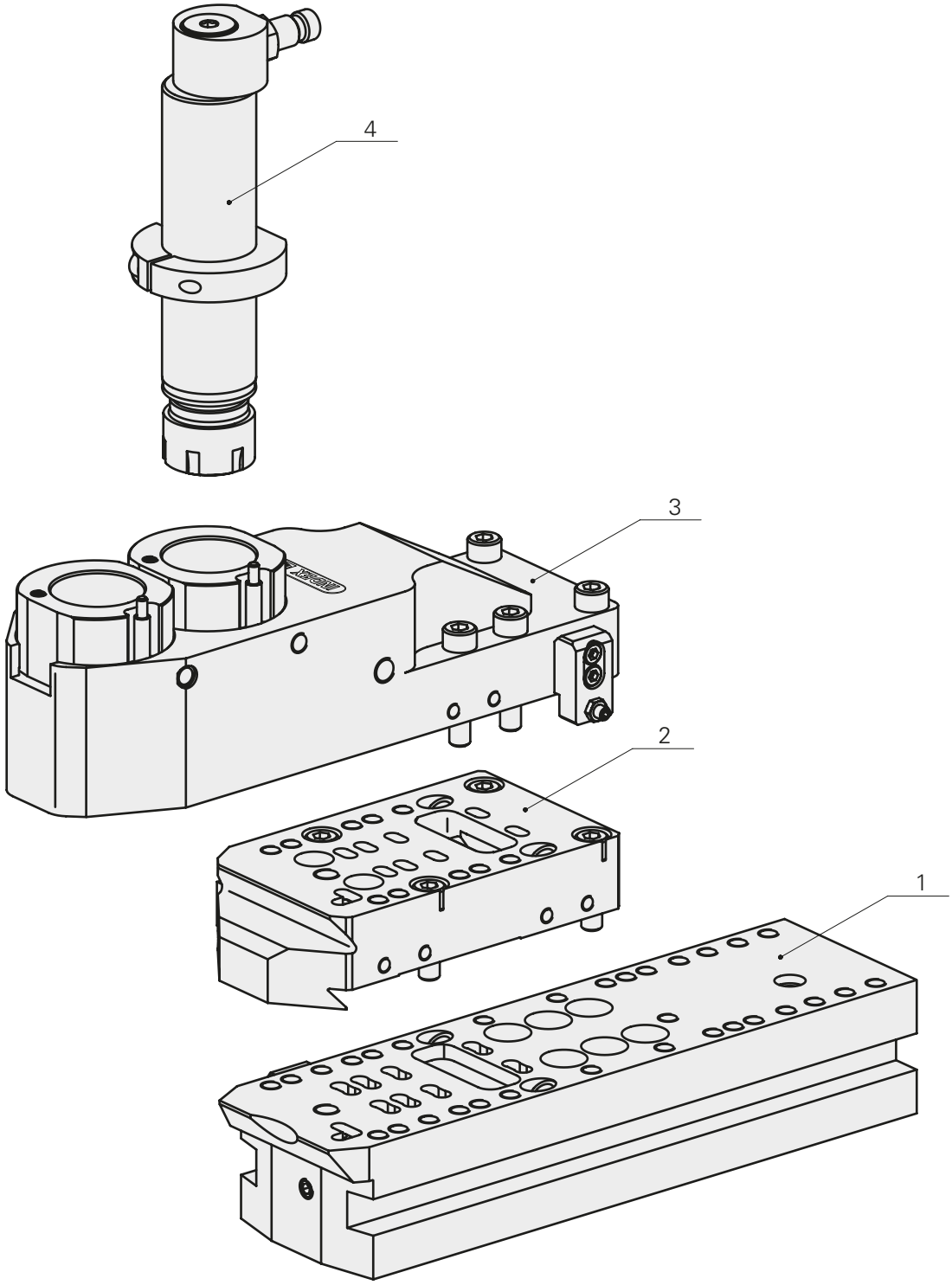

1 Cross slide unit 1.1 - 6.2
2 Intermediate plate as needed
3 Base holder
4 Drill holder, D36mm/D51mm

Modular design of INDEX MS40-6

Milling tool holder

Cross slide unit 1.1 - 6.2, machining in X/Z direction

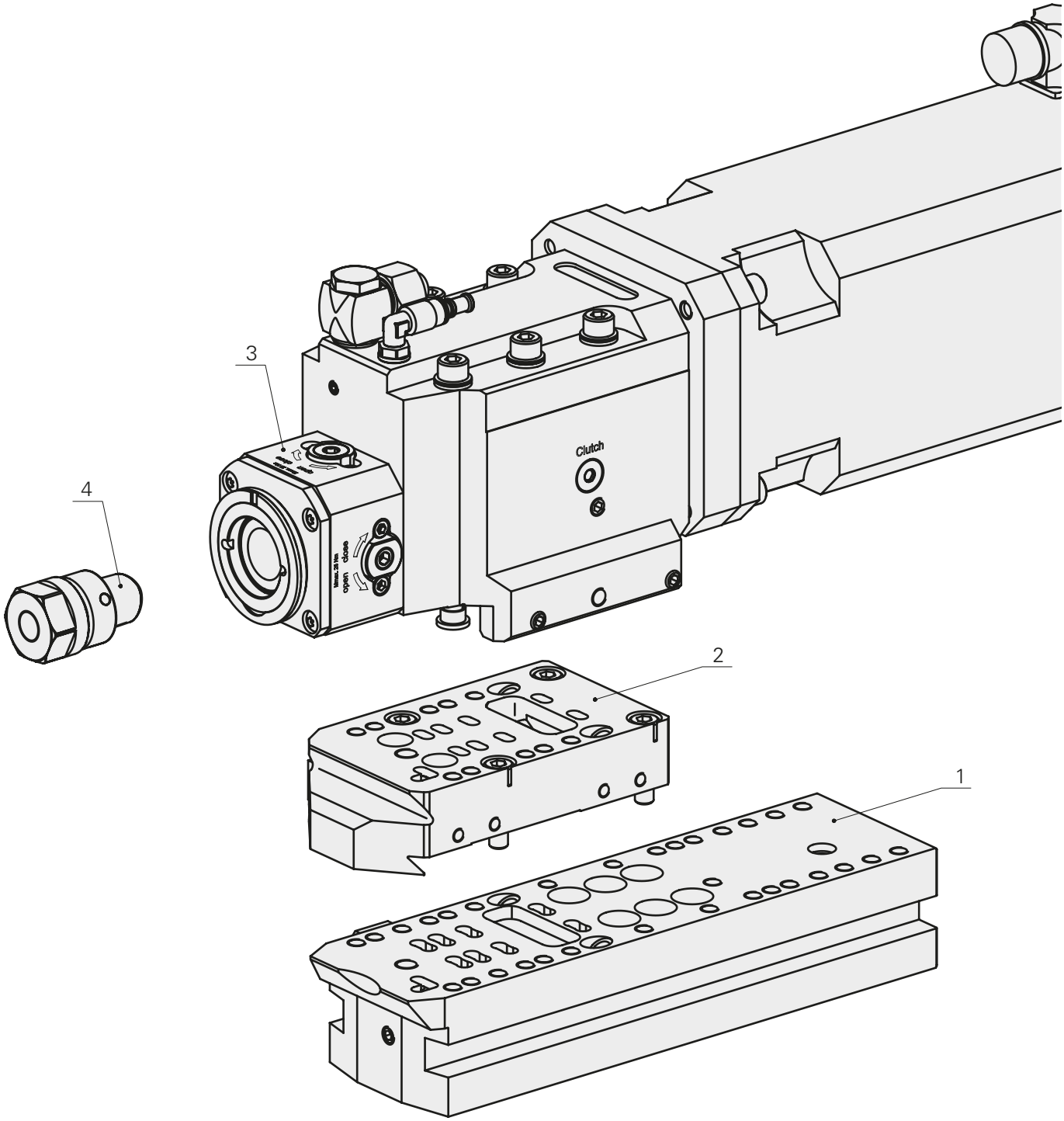

1 Cross slide unit 1.1 - 6.2
2 Intermediate plate as needed
3 Milling unit
4 Quick-change insert INDEX TRAUB CAPTO

Modular design of INDEX MS40-6

Base holder with drill holder ABS

Cross slide unit 1.1 - 6.2, machining in X/Z direction

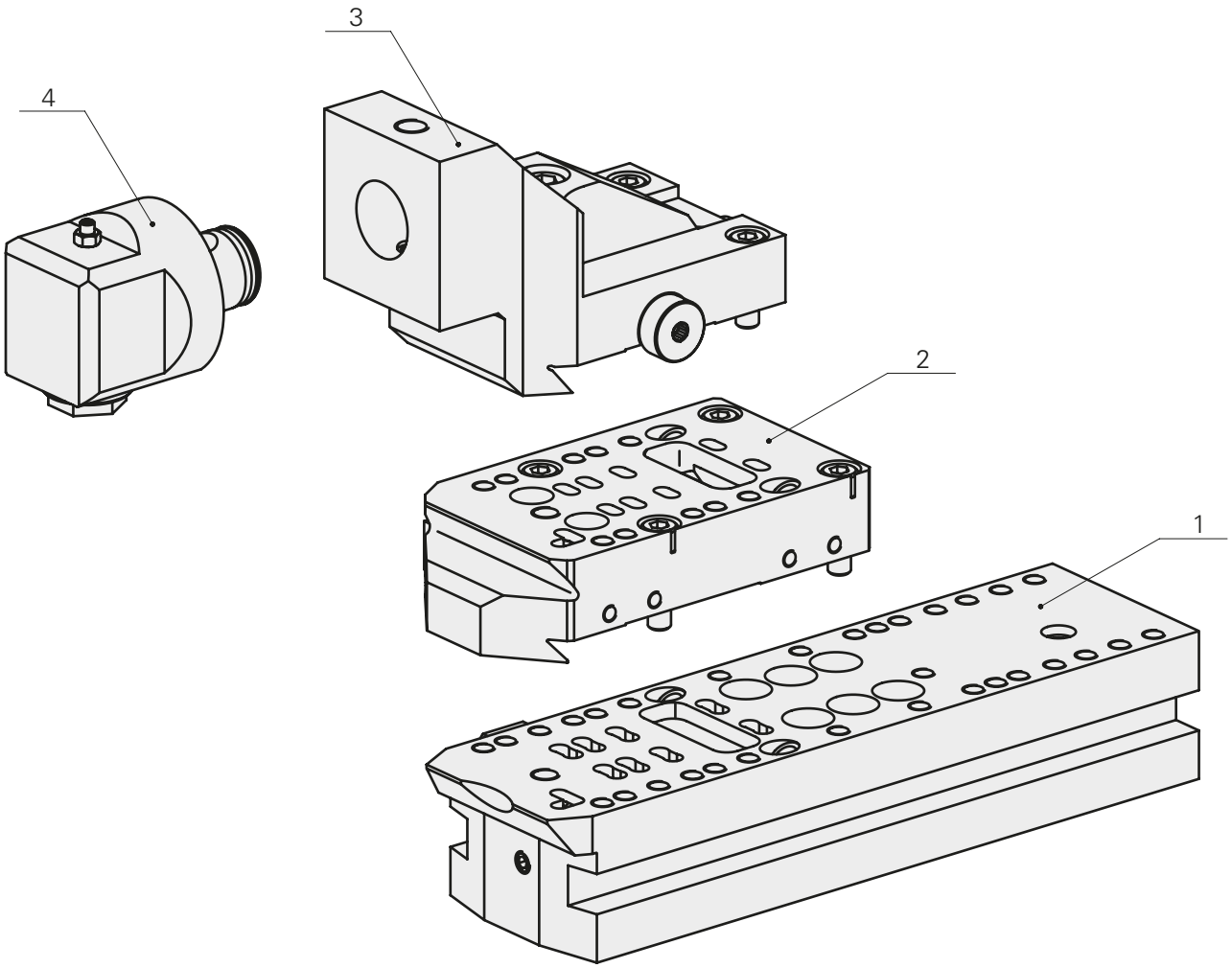

1 Cross slide unit 1.1 - 6.2
2 Intermediate plate as needed
3 Base holder
4 Drilling tool holder ABS

Modular design of INDEX MS40-6

Tool drive unit, shank VDI25

Cross slide unit 1.1 - 6.2, machining in X/Z direction

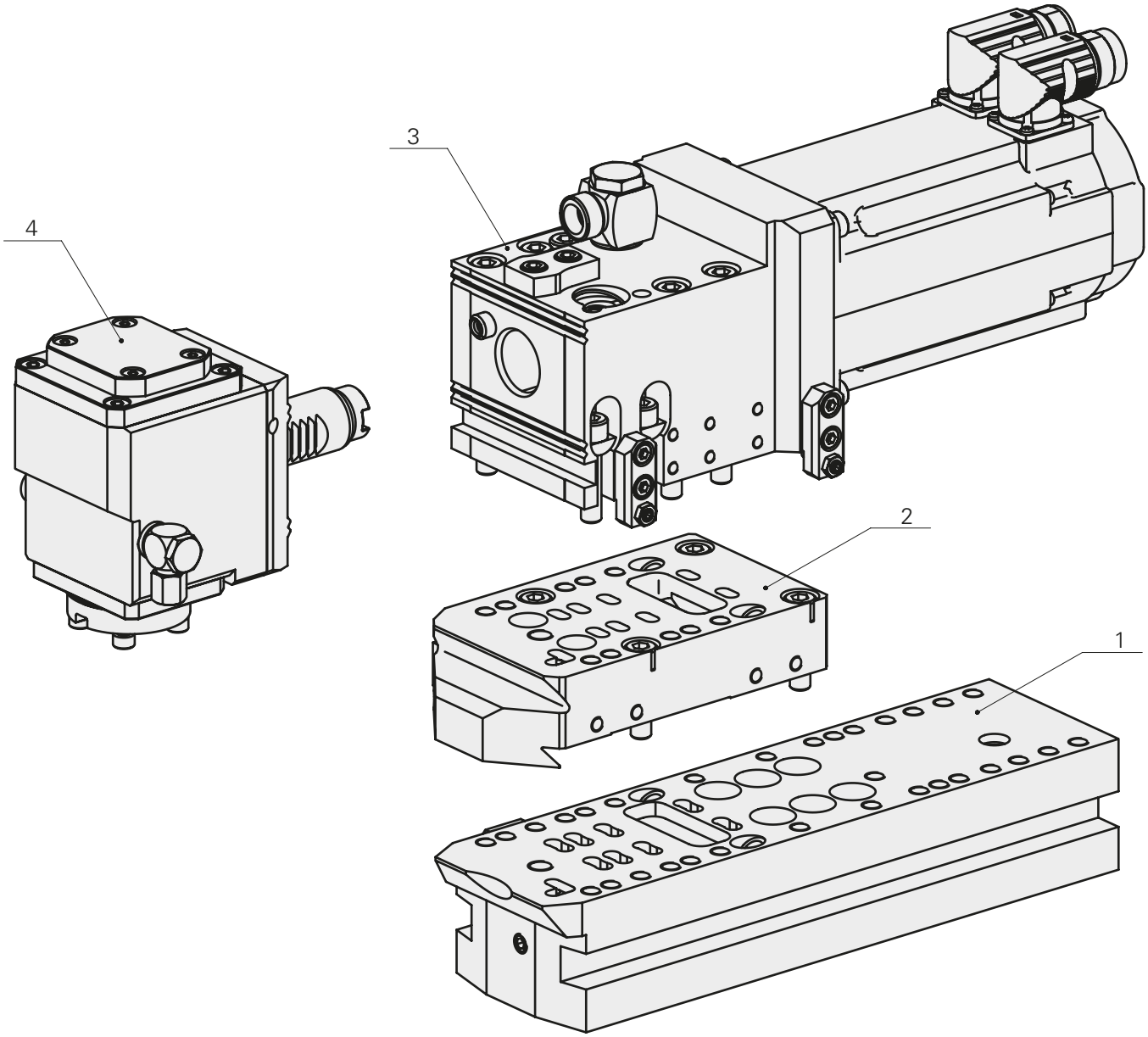

1 Cross slide unit 1.1 - 6.2
2 Intermediate plate as needed
3 Tool drive unit
4 Tool holder VDI25

Modular design of INDEX MS40-6

Polygon turning unit

Cross slide unit 1.1 - 6.2, machining in X/Z direction

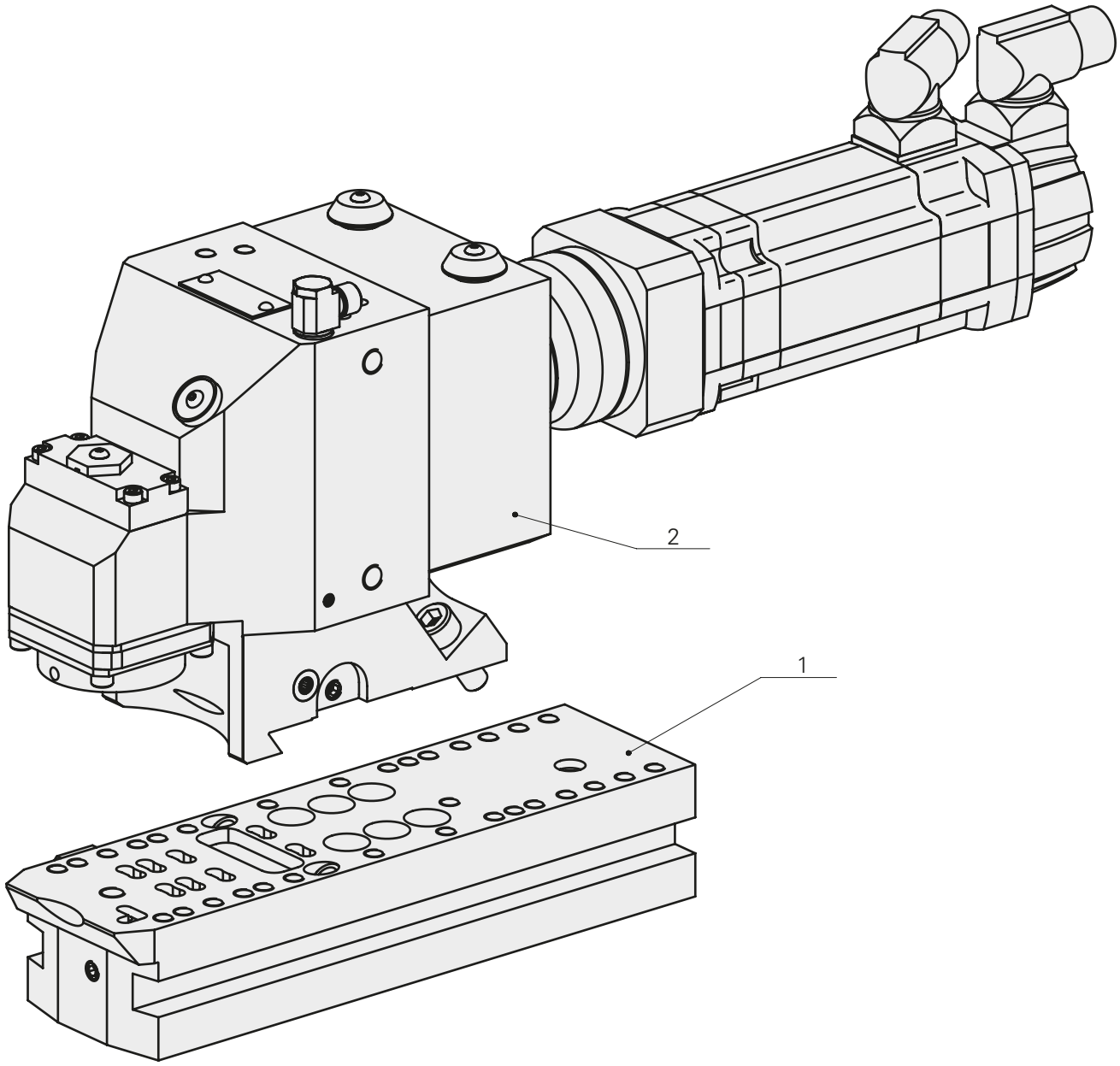

1 Cross slide unit 1.1 - 6.2
2 Polygon turning unit

Modular design of INDEX MS40-6

Rear end machining unit, rigid

Cross slide unit 5.1/6.2, machining in X/Z direction

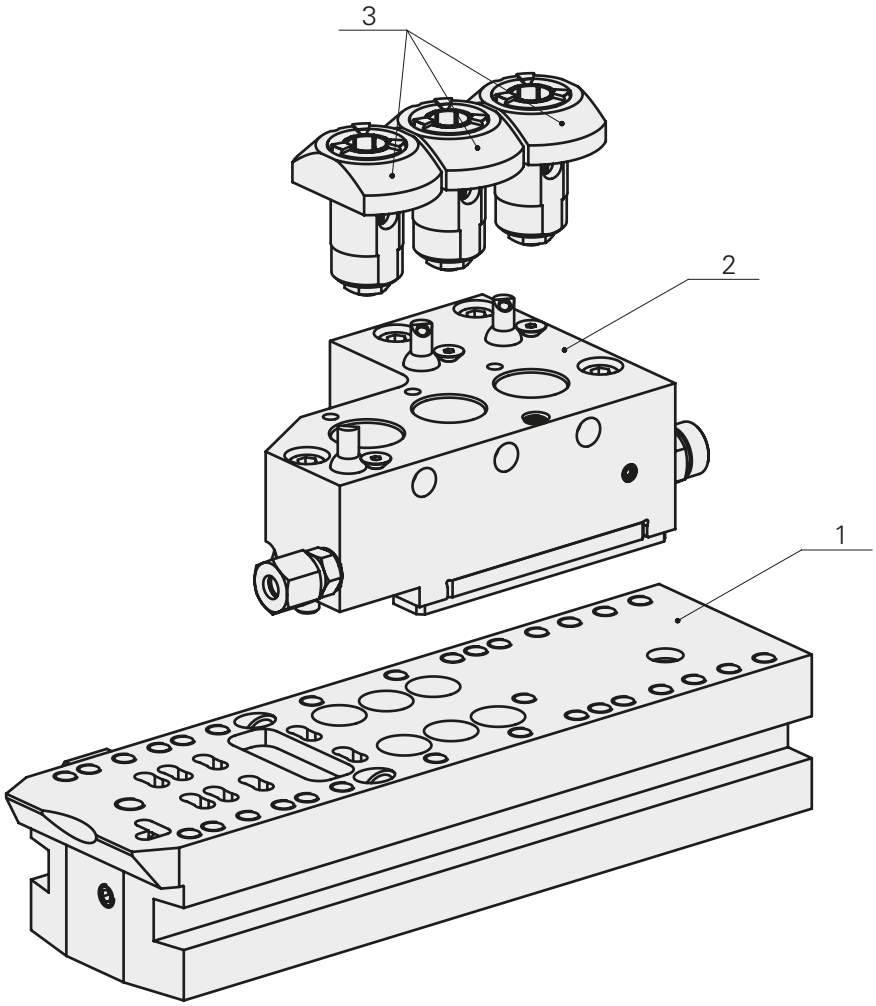

1 Cross slide unit 5.1/6.2 (shown 6.2)
2 Rear end machining unit, rigid
3 Mounting, fixed

Modular design of INDEX MS40-6

Rear end machining unit

Cross slide unit 5.3/6.3, machining in X/Z direction

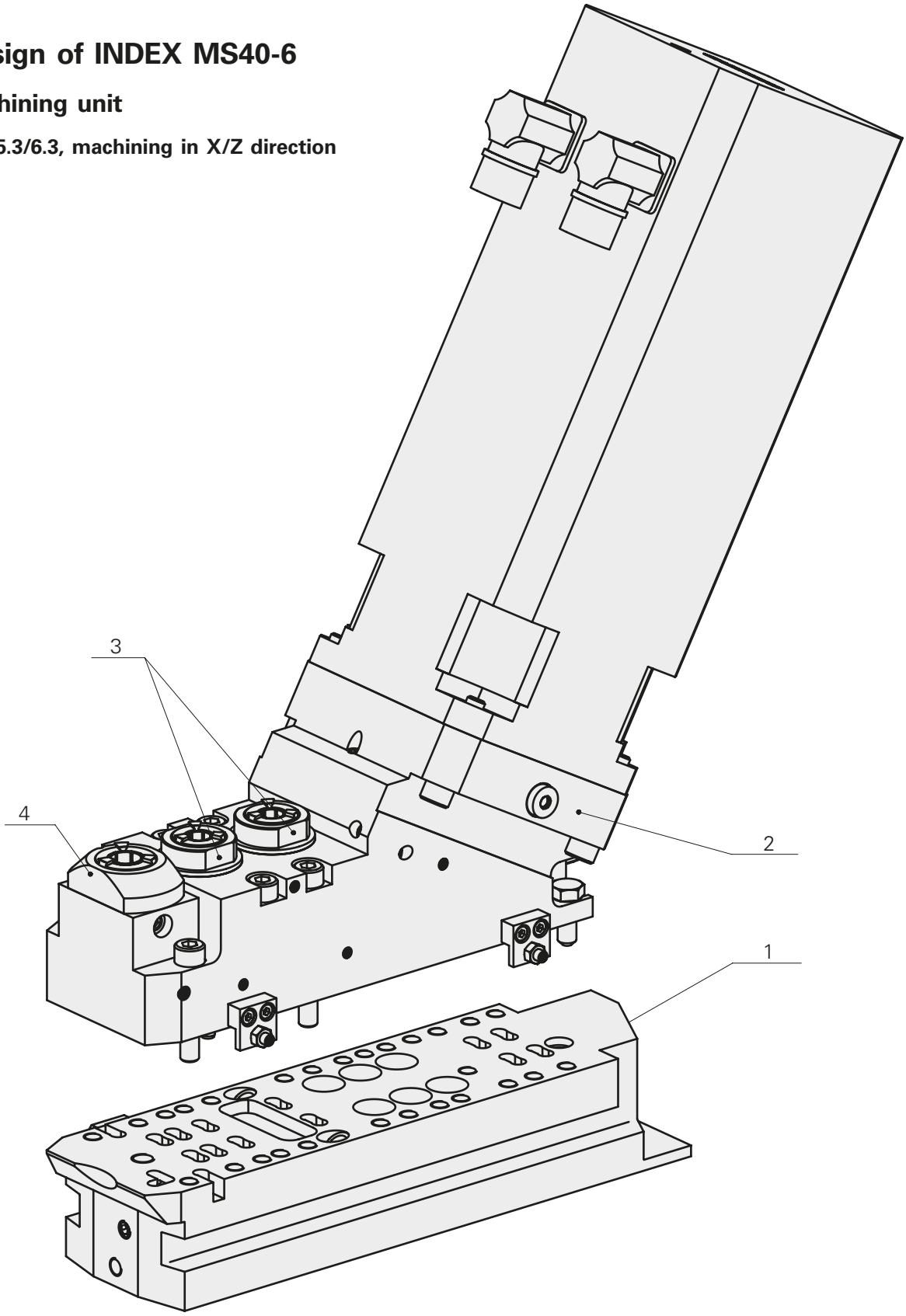

1 Cross slide unit 5.3/6.3
2 Rear end machining unit
3 Mounting fixed / driven

Modular design of INDEX MS40-6

Rear end machining unit

Cross slide unit 5.3/6.3, machining in X/Z direction

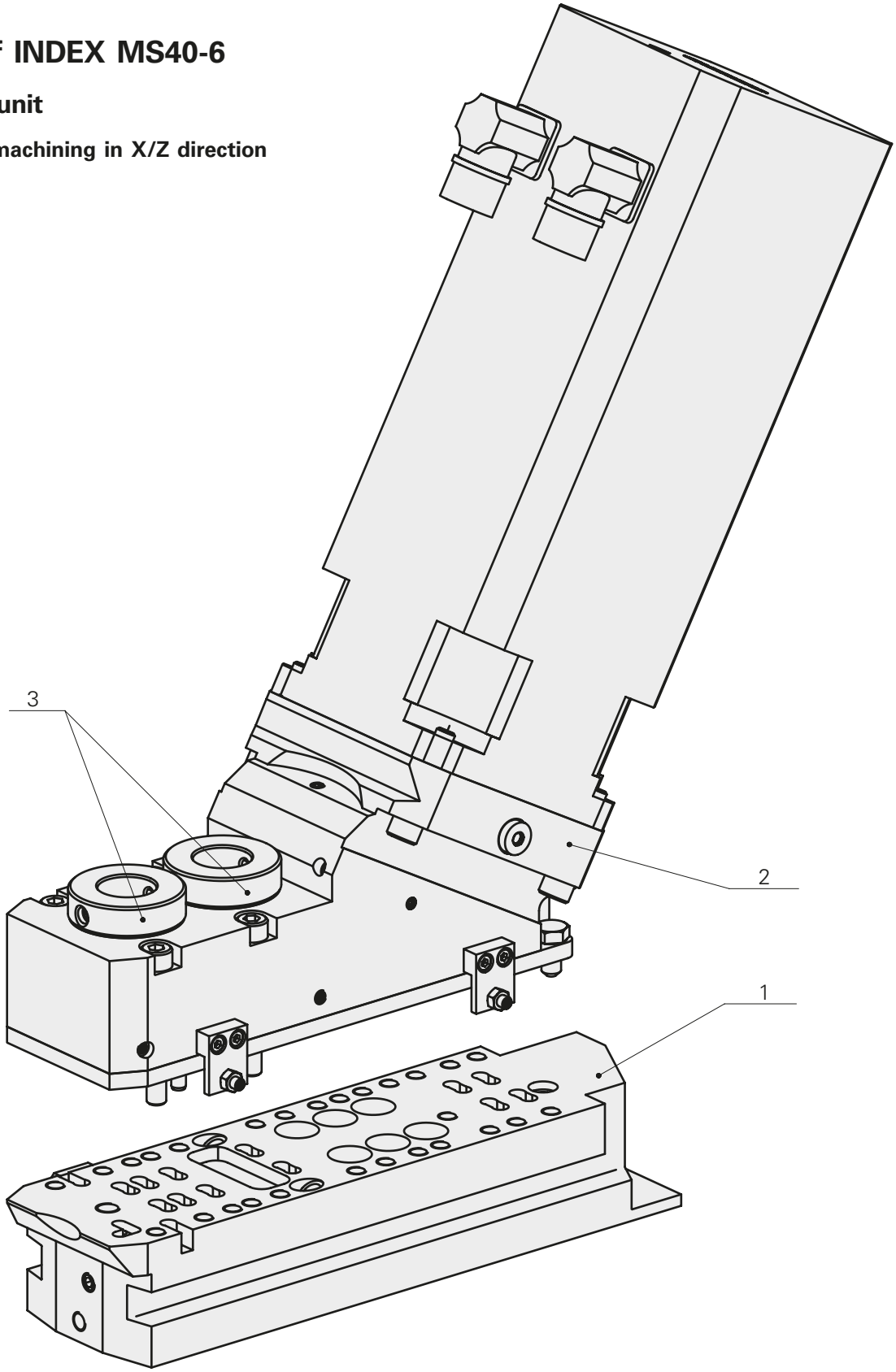

1 Cross slide unit 5.3/6.3
2 Rear end machining unit
3 Mounting driven WFB

Modular design of INDEX MS40-6

Rear end machining unit

Cross slide unit 6.2, machining in X/Z direction

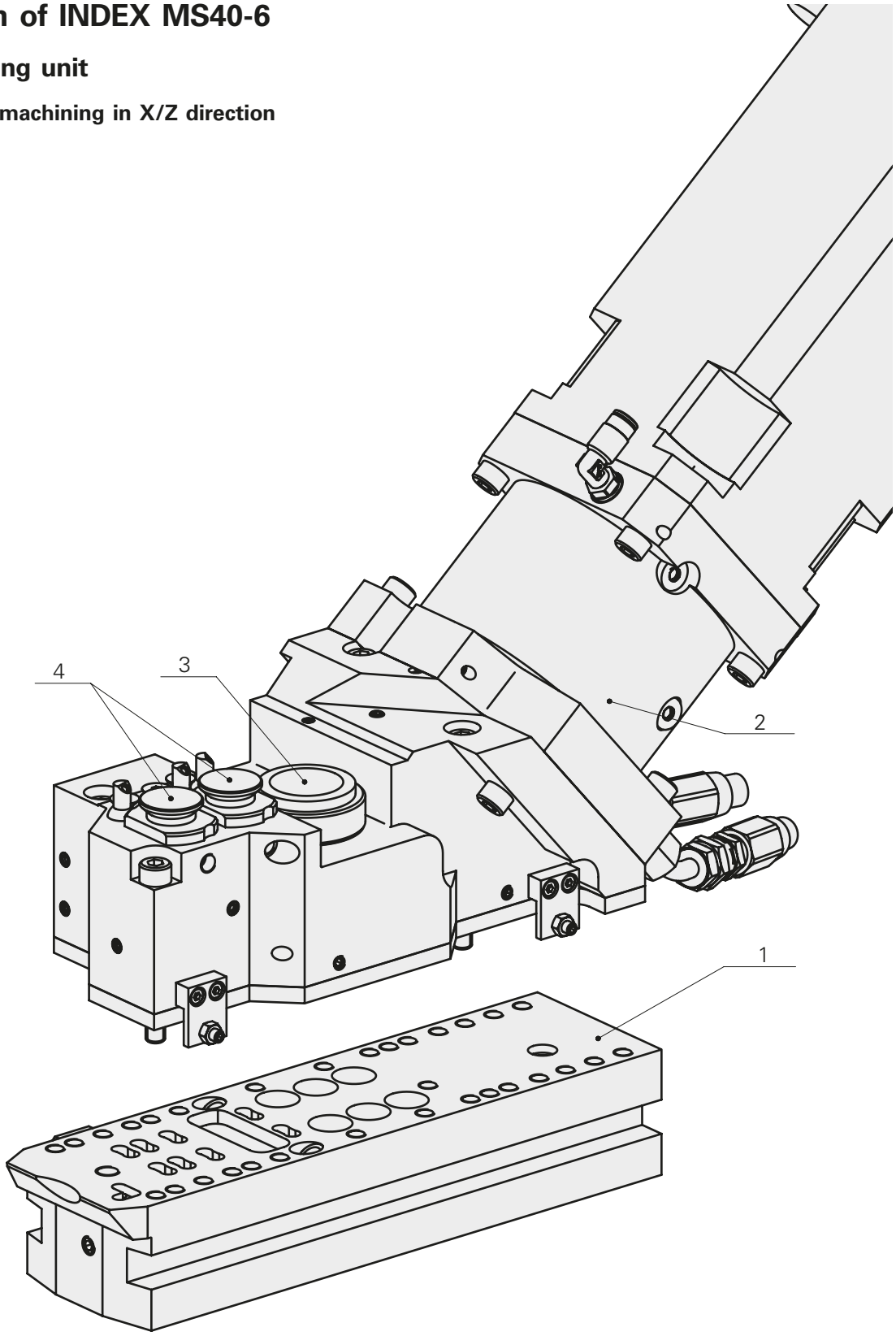

1 Cross slide unit 6.2
2 Rear end machining unit
3 1x Mounting driven WFB
4 2x Mounting fixed

Performance diagram

Tool drive unit VDI25

Speed range 0-6000 rpm

For information on how to use the diagram, see
Chapter "Technical Information".

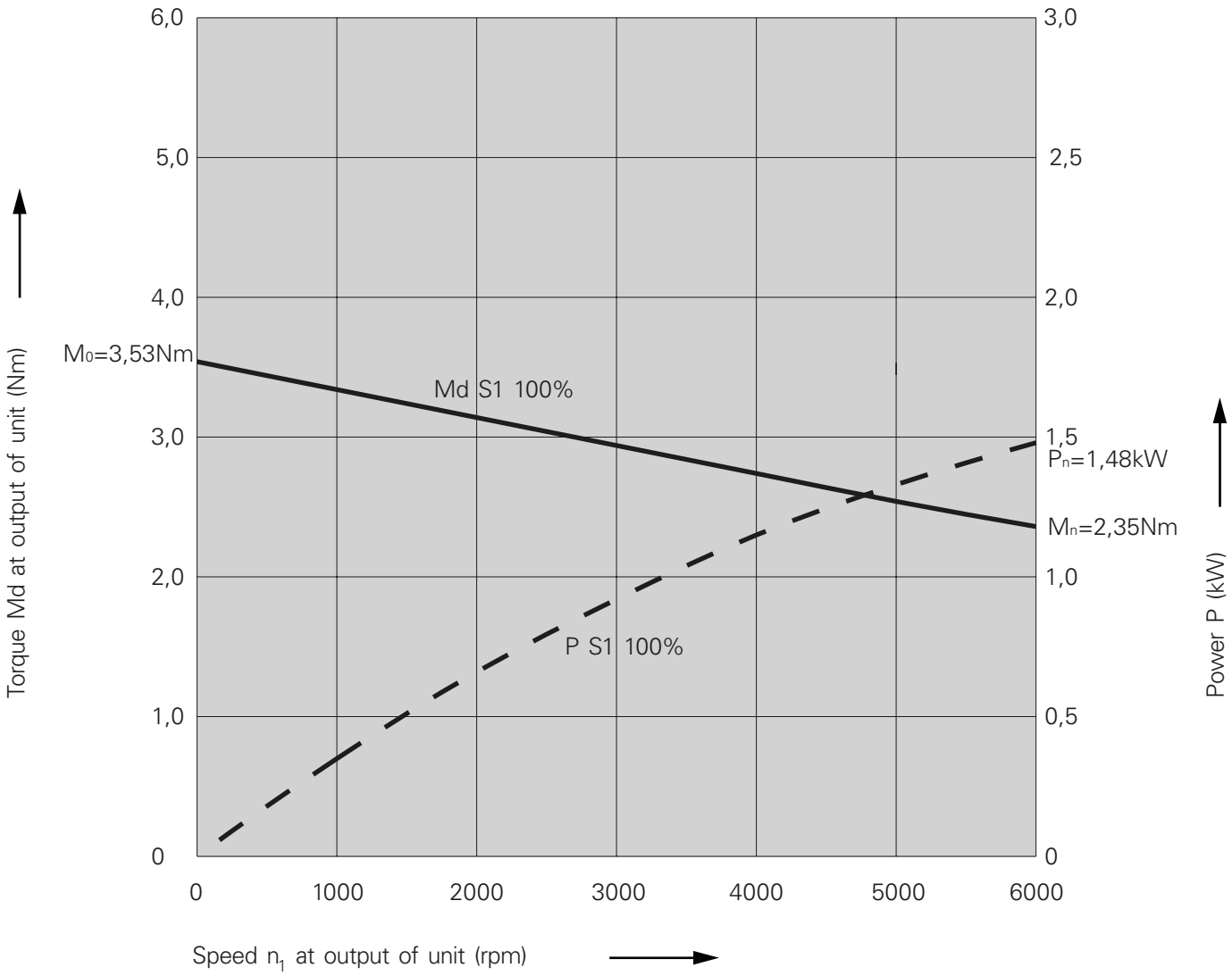

Performance diagram

Tool drive unit VDI25

Speed range 0-6000 rpm

For information on how to use the diagram, see
Chapter “Technical Information”.

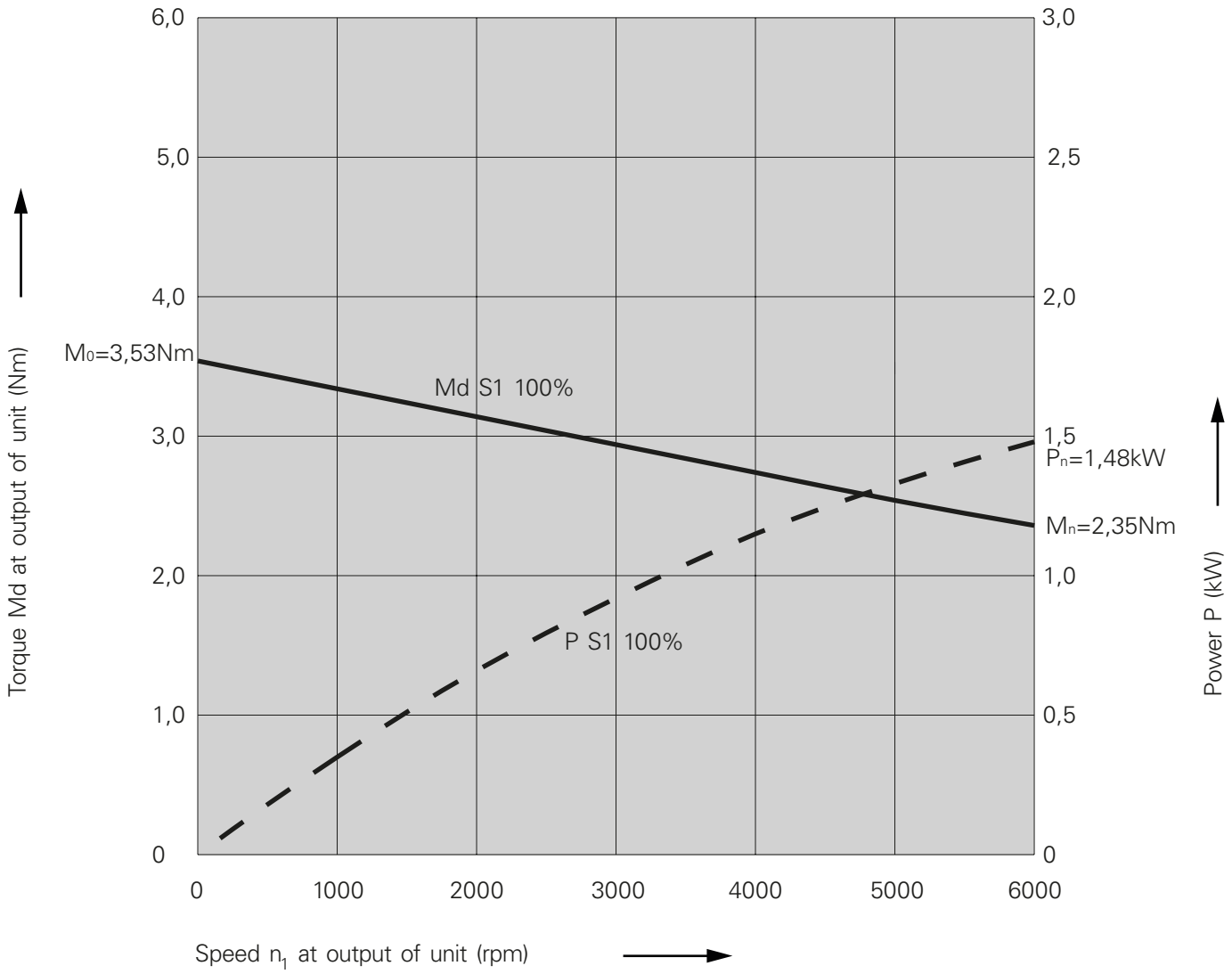

Performance diagram

Polygon turning unit i=1

Speed range 0-6000 rpm

For information on how to use the diagram, see
Chapter "Technical Information".

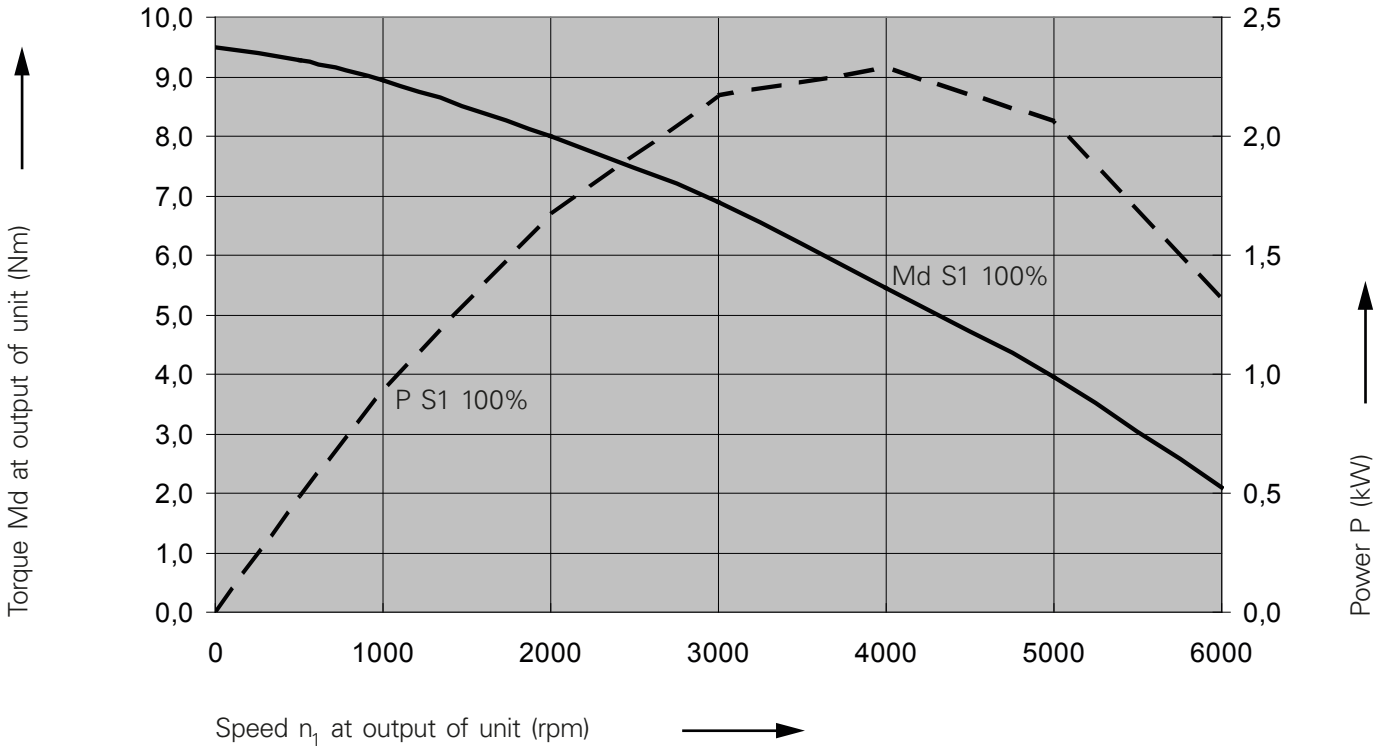

Performance diagram

Polygon turning unit i=5

Speed range 0-1200 rpm

For information on how to use the diagram, see
Chapter "Technical Information".

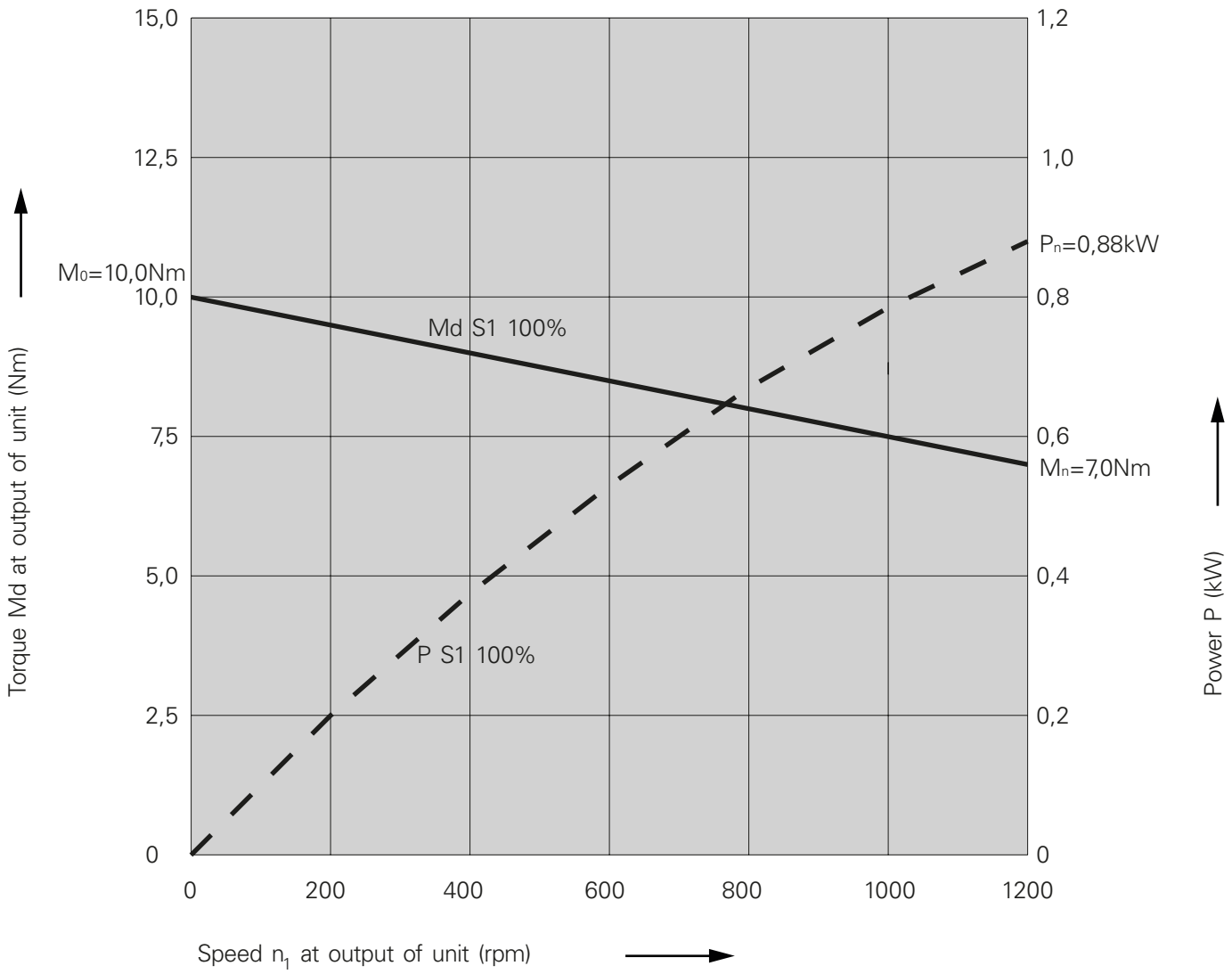

Performance diagram

Polygon turning unit i=7

Speed range 0-857 rpm

For information on how to use the diagram, see
Chapter "Technical Information".

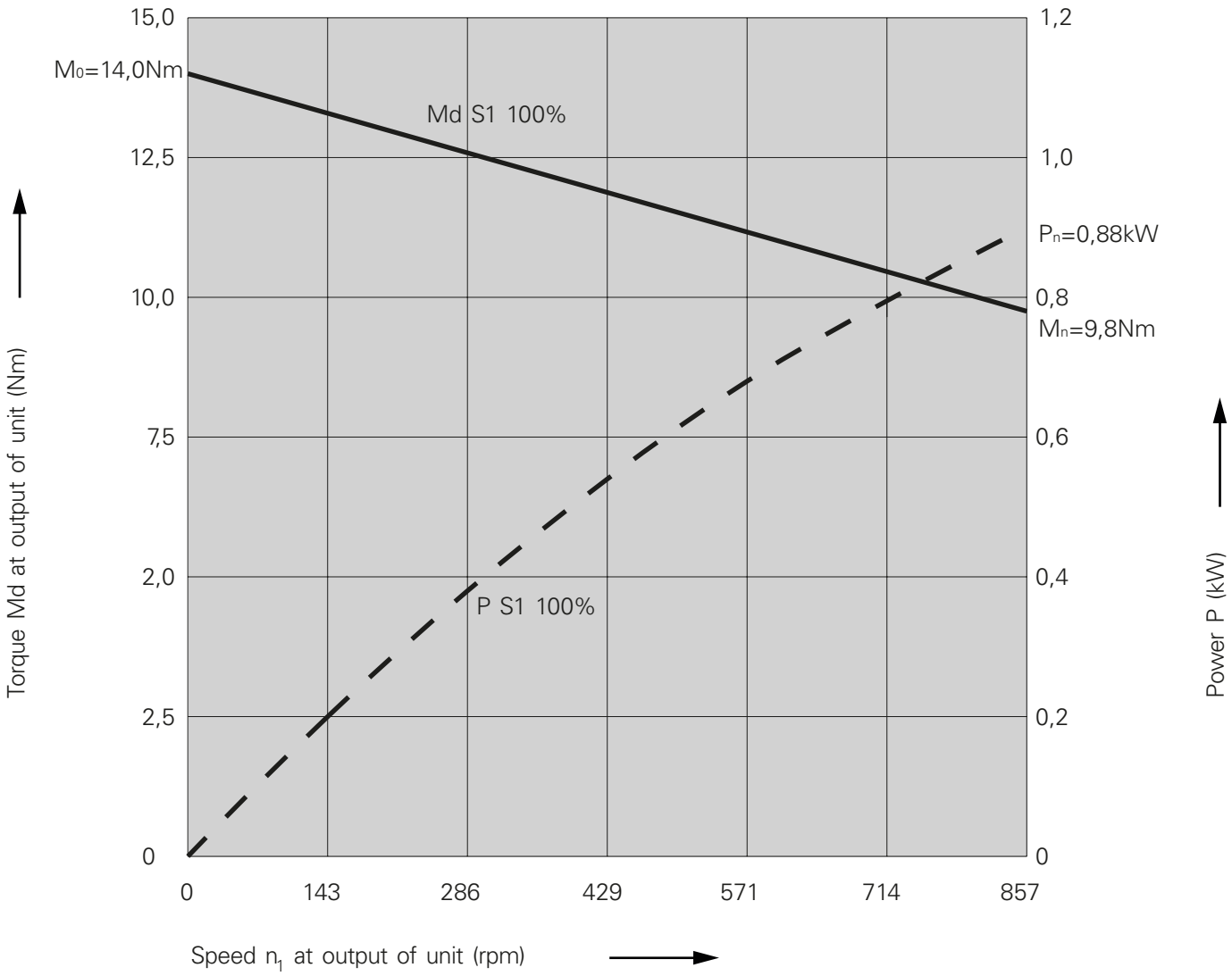

Performance diagram

Rear end machining unit i=0,634 (92:145)

Speed range 0-9456 rpm

For information on how to use the diagram, see
Chapter "Technical Information".

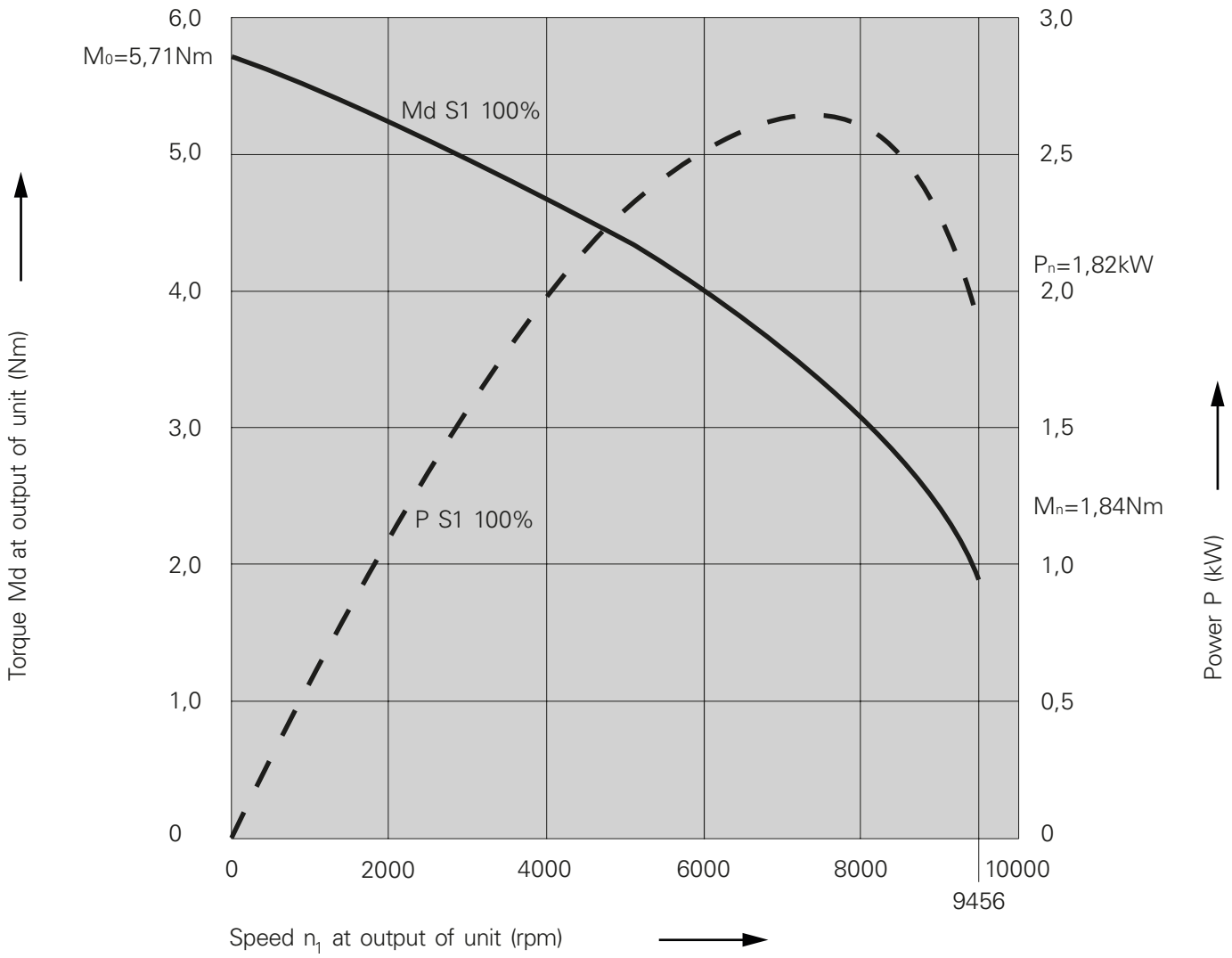

Performance diagram

Rear end machining unit i=0,8 (4:5)

Speed range 0-7500 rpm

For information on how to use the diagram, see
Chapter "Technical Information".

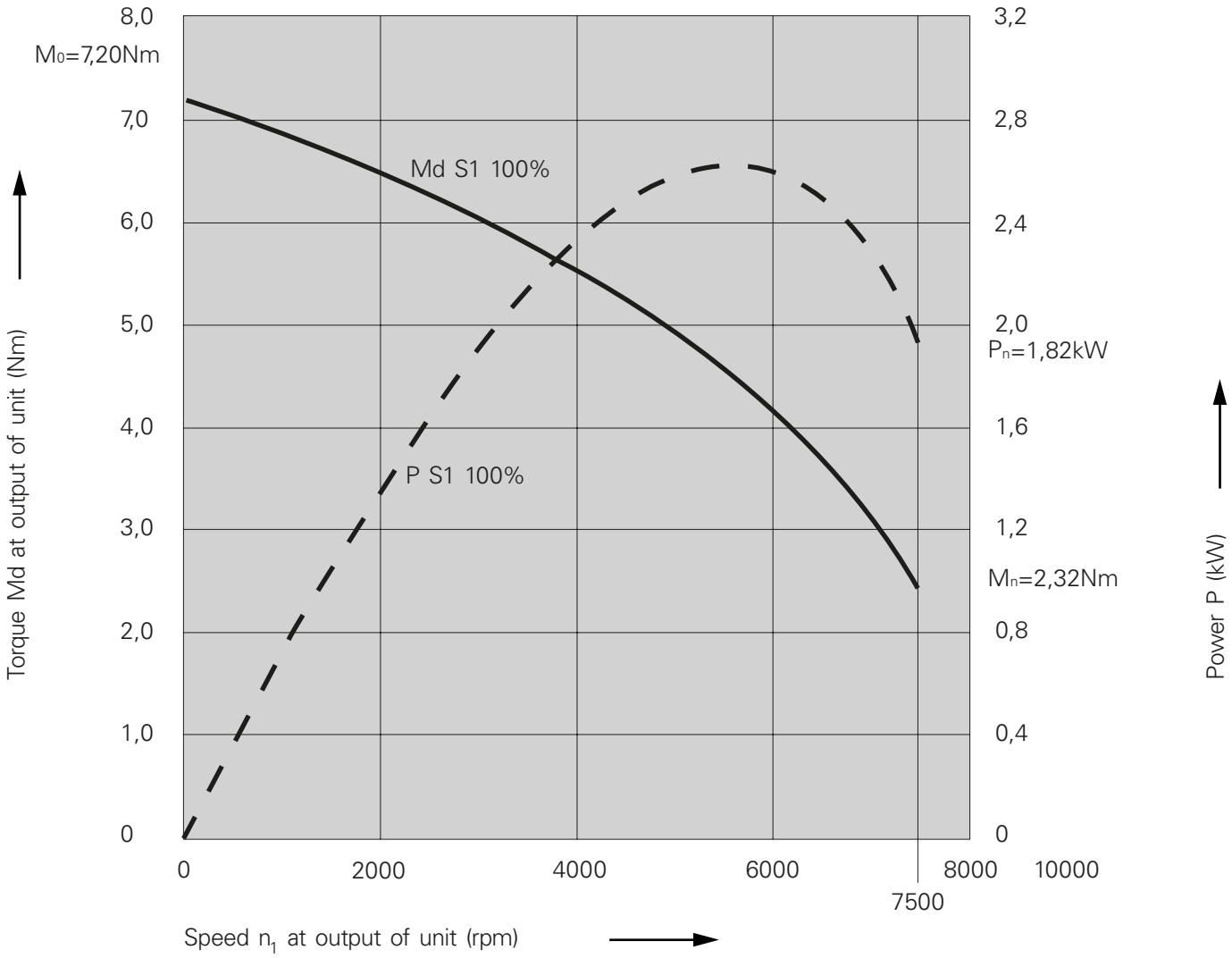

Performance diagram

Rear end machining unit i=0,723 (47:65)

Speed range 0-8297 rpm

For information on how to use the diagram, see
Chapter "Technical Information".

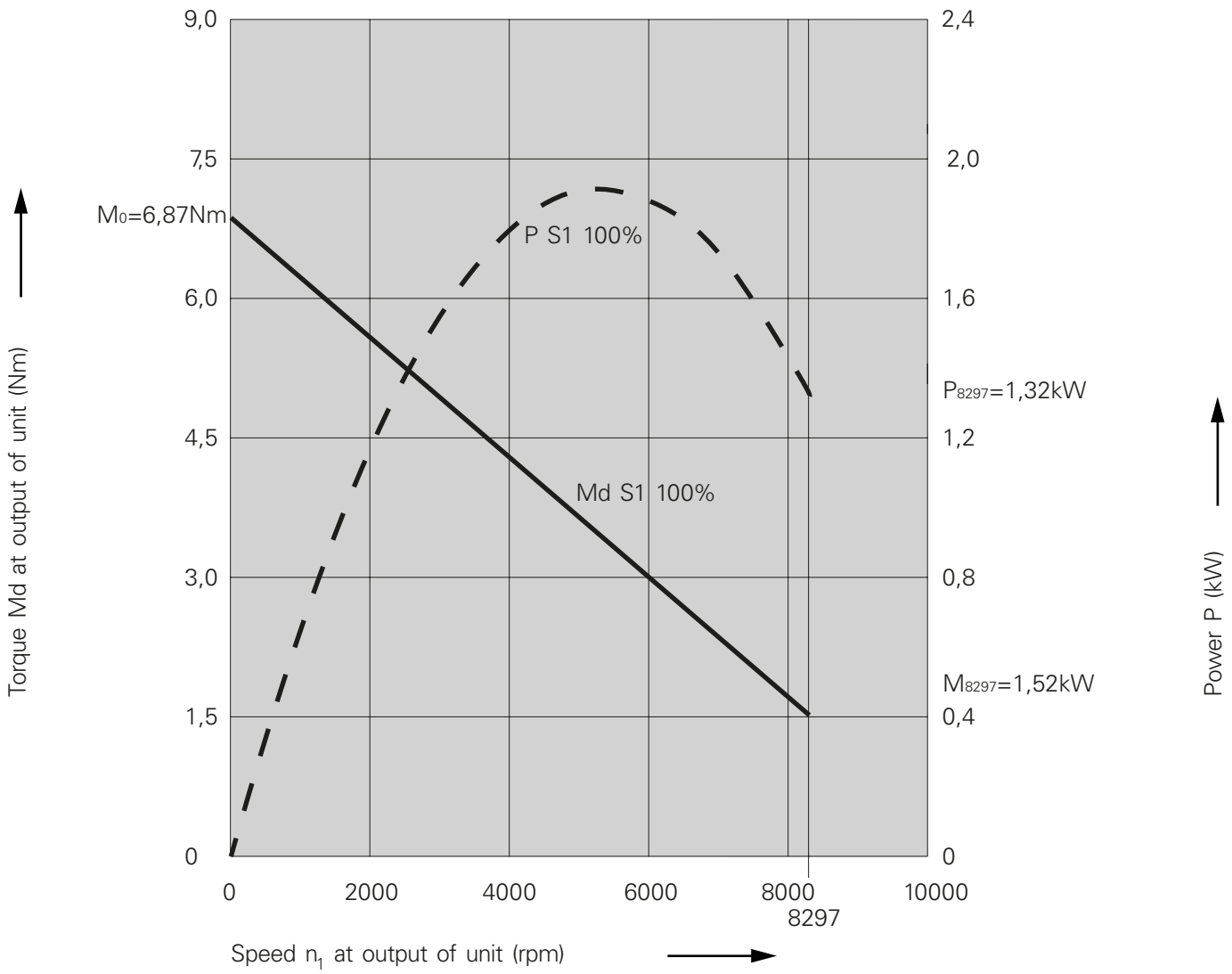

INDEX
TRAUB

DIW050EN - 20093058 06.19 Printed in Germany Subject to change without prior notice

INDEX-Werke GmbH & Co. KG
Hahn & Tessky

Plochinger Straße 92
D-73730 Esslingen

Fon +49 711 3191-0
Fax +49 711 3191-587

info@index-werke.de
www.index-werke.de