11007896
900465.5100

INDEX

Clamping head SK65 D=51,00mm

Technical data

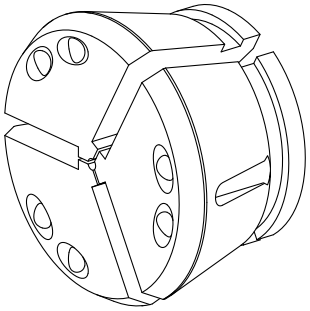

Clamping device size	SK65
manufacturer product line	SPANNTOP nova chuck
Clamping type	grooved
Nominal diameter (mm)	51 Millimeter
Clamping method	External clamping
manufacturer product line	Hainbuch

No 3-side view is currently available for this product

Documents

No downloads available for this product