Supporto di base VDI 20, regolabile

Technical data

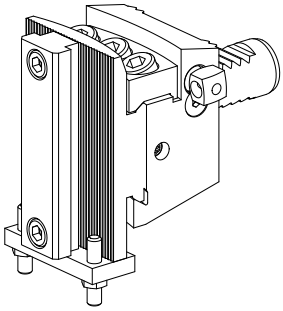

Gambo VDI	VDI 20
Azionamento	non azionato
Fissaggio VDI	dentatura W
Raffreddamento	esterno
Pressione	20 bar
ruotabile di 180°	sì
X [mm]	61
Y [mm]	–
Z [mm]	–
Tipo di torretta portautensili	Torretta a stella
Prodotti INDEX TRAUB	A100 • C100

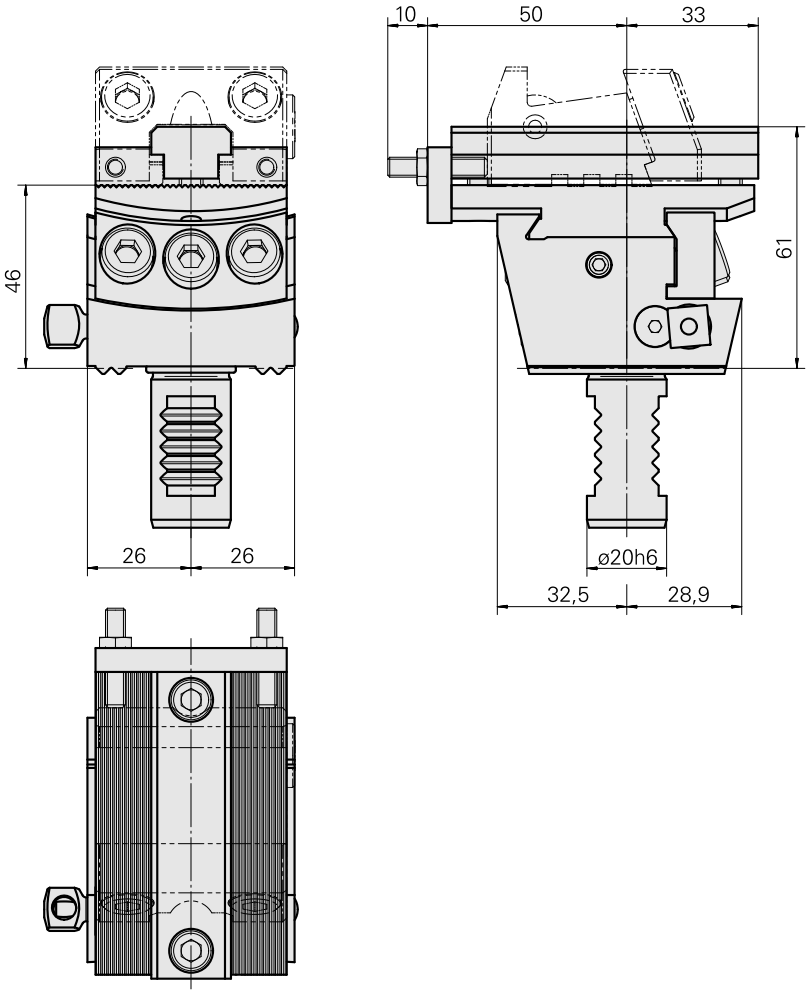

Documents

No downloads available for this product

Accessories

Optional accessories

Tool holders with VDI shank

Grooving tool holding block, vertically adjustable

Product ID : 10607061
Previous product ID : W9990055

Drive	Cooling	Pressure	X [mm]
not live	external	20 bar	30 (1.18")
Y [mm]	Z [mm]	INDEX TRAUB products	
–	–	A100 • C42/65 • G160 • ABC • C100 • C200 • G200 • G200.2 • G220 • G250 • ABC.2	

Grooving tool holding block, vertically adjustable

Product ID : 10463581
Previous product ID : W9990065

Drive	Cooling	Pressure	X [mm]
not live	external	20 bar	38 (1.50")
Y [mm]	Z [mm]	INDEX TRAUB products	
–	–	A100 • C42/65 • G160 • ABC • C100 • C200 • G200 • G200.2 • G220 • G250 • ABC.2	

Other accessories

Shim

Product ID : 10137275
Previous product ID : W31400.46

CLOSING PLUG D 10,5 x 7,5

Product ID : 10908863
Previous product ID : W67530.1212

Coolant nozzle KUGEL 10 D

Product ID : 10965155
Previous product ID : W67501.0022

Countersunk screw M 5x10/T25 verzinkt 402315 10

Product ID : 11038225
Previous product ID : 410362.0510

Tube

Product ID : 10389336
Previous product ID : W61012.0112