# Clamping head

## Technical data

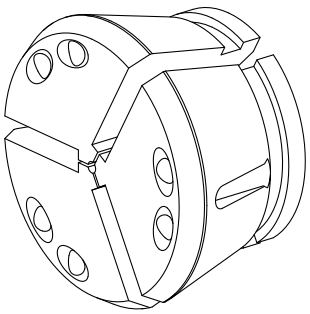

| | |
|---|---|
| **Clamping device size** | SK80 |
| **manufacturer product line** | SPANNTOP nova chuck • SPANNTOP mini chuck |
| **Clamping type** | grooved |
| **Nominal diameter (mm)** | 35 Millimeter |
| **Clamping method** | External clamping |
| **manufacturer product line** | Hainbuch |

No 3-side view is currently available for this product

## Documents

No downloads available for this product