Clamping collet 1212E/F16 Ø=4,00

Technical data

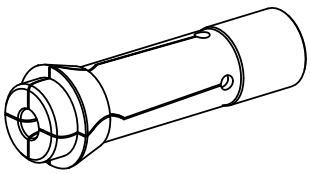

Clamping device size	1212E/F16
manufacturer product line	
Clamping type	smooth
Nominal diameter (mm)	4 Millimeter
Clamping method	External clamping
Collet version	S-slot
manufacturer product line	Schlenker

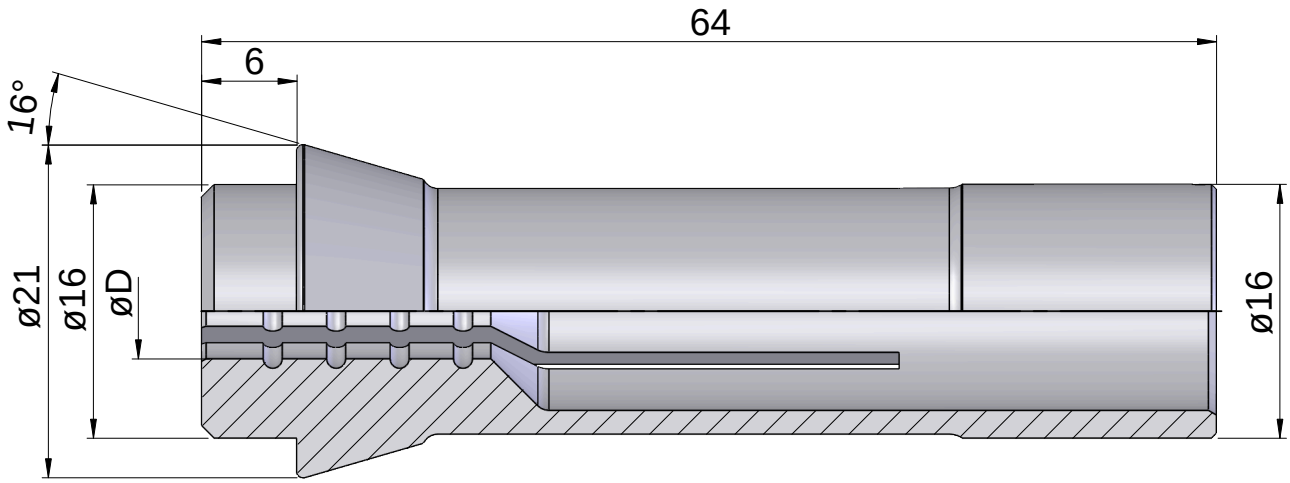

Documents

No downloads available for this product