INDEX

# WFB 20-12 Shrink-fit mounting D6

## Technical data

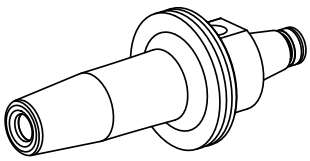

| | |
|---|---|
| **TH accessories category** | WFB 20-12 |
| **Mounting** | Shrink-fit mounting D6 |
| **Quick change inserts** | shrink-fit mounting |

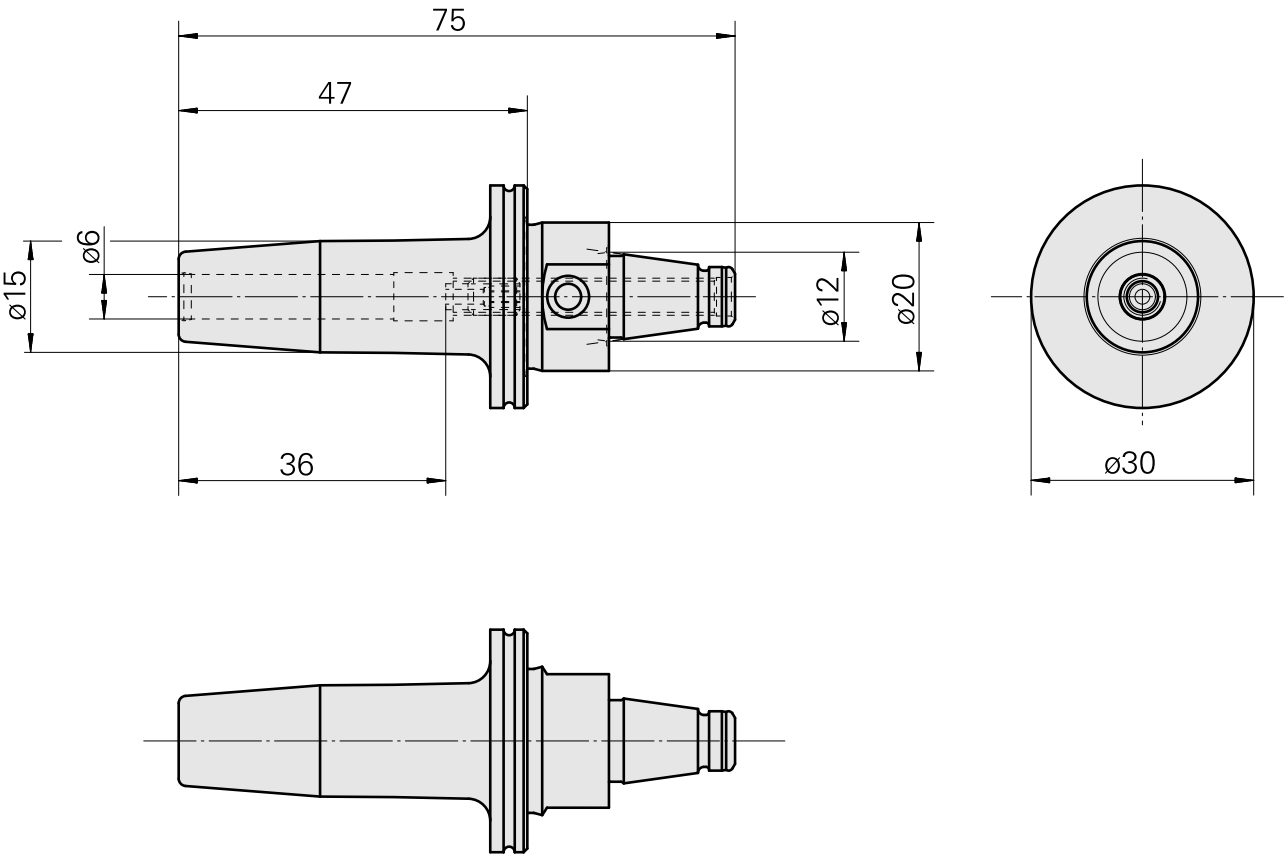

## Documents

No downloads available for this product

## Accessories

### Optional accessories

**Other accessories**

Adjusting screw M 5x10

Product ID : 10674886
Previous product ID : 326793