collet insert

Technical data

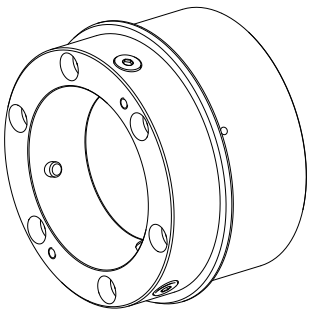

INDEX TRAUB products	MS52-6.3
Spindle clearance	52mm
Machining side	Main spindle
Ext. manufact. product feature	Modular
manufacturer product line	SPANNTOP nova chuck
Spindle mounting	AP133
Clamping device size	SK65
manufacturer product line	Hainbuch

No 3-side view is currently available for this product

Documents

No downloads available for this product

Accessories

Optional accessories

Other accessories

Fixture

Product ID : 10614886
Previous product ID : 900465.8201

Clamping device size SK65	manufacturer product line SPANNTOP nova chuck • SPANNTOP mini chuck	Clamping method External clamping	manufacturer product line Hainbuch

Fixture

Product ID : 10646742
Previous product ID : 900480.8261

Clamping device size SK65	manufacturer product line SPANNTOP nova chuck • SPANNTOP mini chuck • TOPlus chuck	Clamping type Pneumatic	Clamping method External clamping
manufacturer product line Hainbuch			

Clamping head SK65 D=5,00mm

Product ID : 10282816
Previous product ID : 900465.0500

Clamping device size SK65	manufacturer product line SPANNTOP nova chuck	Clamping type grooved	Nominal diameter (mm) 5 Millimeter
Clamping method External clamping	manufacturer product line Hainbuch		

Clamping head SK65 D=6,00mm

Product ID : 10391389
Previous product ID : 900465.0600

Clamping device size SK65	manufacturer product line SPANNTOP nova chuck	Clamping type grooved	Nominal diameter (mm) 6 Millimeter
Clamping method External clamping	manufacturer product line Hainbuch		

Clamping head SK65 D=7,00mm

Product ID : 10335417
Previous product ID : 900465.0700

Clamping device size SK65	manufacturer product line SPANNTOP nova chuck	Clamping type grooved	Nominal diameter (mm) 7 Millimeter
Clamping method External clamping	manufacturer product line Hainbuch		

Clamping head SK65 D=8,00mm

Product ID : 10147578
Previous product ID : 900465.0800

Clamping device size SK65	manufacturer product line SPANNTOP nova chuck	Clamping type grooved	Nominal diameter (mm) 8 Millimeter
Clamping method External clamping	manufacturer product line Hainbuch		

Clamping head SK65 D=9,00mm

Product ID : 10535985
Previous product ID : 900465.0900

Clamping device size SK65	manufacturer product line SPANNTOP nova chuck	Clamping type grooved	Nominal diameter (mm) 9 Millimeter
Clamping method External clamping	manufacturer product line Hainbuch		

Clamping head SK65 D=10,00mm

Product ID : 10482936
Previous product ID : 900465.1000

Clamping device size SK65	manufacturer product line SPANNTOP nova chuck	Clamping type grooved	Nominal diameter (mm) 10 Millimeter
Clamping method External clamping	manufacturer product line Hainbuch		

Clamping head SK65 D=11,00mm

Product ID : 10482288
Previous product ID : 900465.1100

Clamping device size SK65	manufacturer product line SPANNTOP nova chuck	Clamping type grooved	Nominal diameter (mm) 11 Millimeter
Clamping method External clamping	manufacturer product line Hainbuch		

Clamping head SK65 D=12,00mm

Product ID : 11050855
Previous product ID : 900465.1200

Clamping device size SK65	manufacturer product line SPANNTOP nova chuck	Clamping type grooved	Nominal diameter (mm) 12 Millimeter
Clamping method External clamping	manufacturer product line Hainbuch		

Clamping head SK65 D=13,00mm

Product ID : 10464997
Previous product ID : 900465.1300

Clamping device size SK65	manufacturer product line SPANNTOP nova chuck	Clamping type grooved	Nominal diameter (mm) 13 Millimeter
Clamping method External clamping	manufacturer product line Hainbuch		

Clamping head SK65 D=14,00mm

Product ID : 10930602
Previous product ID : 900465.1400

Clamping device size SK65	manufacturer product line SPANNTOP nova chuck	Clamping type grooved	Nominal diameter (mm) 14 Millimeter
Clamping method External clamping	manufacturer product line Hainbuch		

Clamping head SK65 D=15,00mm

Product ID : 10174520
Previous product ID : 900465.1500

Clamping device size SK65	manufacturer product line SPANNTOP nova chuck	Clamping type grooved	Nominal diameter (mm) 15 Millimeter
Clamping method External clamping	manufacturer product line Hainbuch		

Clamping head SK65 D=16,00mm

Product ID : 10630545
Previous product ID : 900465.1600

Clamping device size SK65	manufacturer product line SPANNTOP nova chuck	Clamping type grooved	Nominal diameter (mm) 16 Millimeter
Clamping method External clamping	manufacturer product line Hainbuch		

Clamping head SK65 D=17,00mm

Product ID : 10691868
Previous product ID : 900465.1700

Clamping device size SK65	manufacturer product line SPANNTOP nova chuck	Clamping type grooved	Nominal diameter (mm) 17 Millimeter
Clamping method External clamping	manufacturer product line Hainbuch		

Clamping head SK65 D=18,00mm

Product ID : 10303296
Previous product ID : 900465.1800

Clamping device size SK65	manufacturer product line SPANNTOP nova chuck	Clamping type grooved	Nominal diameter (mm) 18 Millimeter
Clamping method External clamping	manufacturer product line Hainbuch		

Clamping head SK65 D=19,00mm

Product ID : 10393834
Previous product ID : 900465.1900

Clamping device size SK65	manufacturer product line SPANNTOP nova chuck	Clamping type grooved	Nominal diameter (mm) 19 Millimeter
Clamping method External clamping	manufacturer product line Hainbuch		

Clamping head SK65 D=20,00mm

Product ID : 10554430
Previous product ID : 900465.2000

Clamping device size SK65	manufacturer product line SPANNTOP nova chuck	Clamping type grooved	Nominal diameter (mm) 20 Millimeter
Clamping method External clamping	manufacturer product line Hainbuch		

Clamping head SK65 D=21,00mm

Product ID : 10554471
Previous product ID : 900465.2100

Clamping device size SK65	manufacturer product line SPANNTOP nova chuck	Clamping type grooved	Nominal diameter (mm) 21 Millimeter
Clamping method External clamping	manufacturer product line Hainbuch		

Clamping head SK65 D=22,00mm

Product ID : 10381560
Previous product ID : 900465.2200

Clamping device size	manufacturer product line	Clamping type	Nominal diameter (mm)
SK65	SPANNTOP nova chuck	grooved	22 Millimeter
Clamping method	manufacturer product line		
External clamping	Hainbuch		

Clamping head SK65 D=23,00mm

Product ID : 10741026
Previous product ID : 900465.2300

Clamping device size	manufacturer product line	Clamping type	Nominal diameter (mm)
SK65	SPANNTOP nova chuck	grooved	23 Millimeter
Clamping method	manufacturer product line		
External clamping	Hainbuch		

Clamping head SK65 D=24,00mm

Product ID : 10229489
Previous product ID : 900465.2400

Clamping device size	manufacturer product line	Clamping type	Nominal diameter (mm)
SK65	SPANNTOP nova chuck	grooved	24 Millimeter
Clamping method	manufacturer product line		
External clamping	Hainbuch		

Clamping head SK65 D=25,00mm

Product ID : 10806555
Previous product ID : 900465.2500

Clamping device size	manufacturer product line	Clamping type	Nominal diameter (mm)
SK65	SPANNTOP nova chuck	grooved	25 Millimeter
Clamping method	manufacturer product line		
External clamping	Hainbuch		

Spannkopf SK65 D=27,00mm

Product ID : 10756684
Previous product ID : 900465.2700

Clamping device size	manufacturer product line	Clamping type	Nominal diameter (mm)
SK65	SPANNTOP nova chuck	grooved	27 Millimeter
Clamping method	manufacturer product line		
External clamping	Hainbuch		

Clamping head SK65 D=28,00mm

Product ID : 10342545
Previous product ID : 900465.2800

Clamping device size	manufacturer product line	Clamping type	Nominal diameter (mm)
SK65	SPANNTOP nova chuck	grooved	28 Millimeter
Clamping method	manufacturer product line		
External clamping	Hainbuch		

Clamping head SK65 D=29,00mm

Product ID : 10385913
Previous product ID : 900465.2900

Clamping device size	manufacturer product line	Clamping type	Nominal diameter (mm)
SK65	SPANNTOP nova chuck	grooved	29 Millimeter
Clamping method	manufacturer product line		
External clamping	Hainbuch		

Clamping head SK65 D=30,00mm

Product ID : 10642391
Previous product ID : 900465.3000

Clamping device size	manufacturer product line	Clamping type	Nominal diameter (mm)
SK65	SPANNTOP nova chuck	grooved	30 Millimeter
Clamping method	manufacturer product line		
External clamping	Hainbuch		

Clamping head SK65 D=31,00mm

Product ID : 10479992
Previous product ID : 900465.3100

Clamping device size SK65	manufacturer product line SPANNTOP nova chuck	Clamping type grooved	Nominal diameter (mm) 31 Millimeter
Clamping method External clamping	manufacturer product line Hainbuch		

Clamping head SK65 D=32,00mm

Product ID : 10050145
Previous product ID : 900465.3200

Clamping device size SK65	manufacturer product line SPANNTOP nova chuck	Clamping type grooved	Nominal diameter (mm) 32 Millimeter
Clamping method External clamping	manufacturer product line Hainbuch		

Clamping head SK65 D=33,00mm

Product ID : 10881990
Previous product ID : 900465.3300

Clamping device size SK65	manufacturer product line SPANNTOP nova chuck	Clamping type grooved	Nominal diameter (mm) 33 Millimeter
Clamping method External clamping	manufacturer product line Hainbuch		

Clamping head SK65 D=34,00mm

Product ID : 10788415
Previous product ID : 900465.3400

Clamping device size SK65	manufacturer product line SPANNTOP nova chuck	Clamping type grooved	Nominal diameter (mm) 34 Millimeter
Clamping method External clamping	manufacturer product line Hainbuch		

Clamping head SK65 D=35,00mm

Product ID : 10071696
Previous product ID : 900465.3500

Clamping device size SK65	manufacturer product line SPANNTOP nova chuck	Clamping type grooved	Nominal diameter (mm) 35 Millimeter
Clamping method External clamping	manufacturer product line Hainbuch		

Clamping head SK65 D=36,00mm

Product ID : 10518620
Previous product ID : 900465.3600

Clamping device size SK65	manufacturer product line SPANNTOP nova chuck	Clamping type grooved	Nominal diameter (mm) 36 Millimeter
Clamping method External clamping	manufacturer product line Hainbuch		

Clamping head SK65 D=37,00mm

Product ID : 10813265
Previous product ID : 900465.3700

Clamping device size SK65	manufacturer product line SPANNTOP nova chuck	Clamping type grooved	Nominal diameter (mm) 37 Millimeter
Clamping method External clamping	manufacturer product line Hainbuch		

Clamping head SK65 D=38,00mm

Product ID : 11041276
Previous product ID : 900465.3800

Clamping device size SK65	manufacturer product line SPANNTOP nova chuck	Clamping type grooved	Nominal diameter (mm) 38 Millimeter
Clamping method External clamping	manufacturer product line Hainbuch		

Clamping head SK65 D=39,00mm

Product ID : 11017041
Previous product ID : 900465.3900

Clamping device size SK65	manufacturer product line SPANNTOP nova chuck	Clamping type grooved	Nominal diameter (mm) 39 Millimeter
Clamping method External clamping	manufacturer product line Hainbuch		

Clamping head SK65 D=40,00mm

Product ID : 10827589
Previous product ID : 900465.4000

Clamping device size SK65	manufacturer product line SPANNTOP nova chuck	Clamping type grooved	Nominal diameter (mm) 40 Millimeter
Clamping method External clamping	manufacturer product line Hainbuch		

Clamping head SK65 D=41,00mm

Product ID : 10487283
Previous product ID : 900465.4100

Clamping device size SK65	manufacturer product line SPANNTOP nova chuck	Clamping type grooved	Nominal diameter (mm) 41 Millimeter
Clamping method External clamping	manufacturer product line Hainbuch		

Clamping head SK65 D=42,00mm

Product ID : 10948181
Previous product ID : 900465.4200

Clamping device size SK65	manufacturer product line SPANNTOP nova chuck	Clamping type grooved	Nominal diameter (mm) 42 Millimeter
Clamping method External clamping	manufacturer product line Hainbuch		

Clamping head SK65 D=43,00mm

Product ID : 10185590
Previous product ID : 900465.4300

Clamping device size SK65	manufacturer product line SPANNTOP nova chuck	Clamping type grooved	Nominal diameter (mm) 43 Millimeter
Clamping method External clamping	manufacturer product line Hainbuch		

Clamping head SK65 D=44,00mm

Product ID : 10364976
Previous product ID : 900465.4400

Clamping device size SK65	manufacturer product line SPANNTOP nova chuck	Clamping type grooved	Nominal diameter (mm) 44 Millimeter
Clamping method External clamping	manufacturer product line Hainbuch		

Clamping head SK65 D=45,00mm

Product ID : 10323021
Previous product ID : 900465.4500

Clamping device size SK65	manufacturer product line SPANNTOP nova chuck	Clamping type grooved	Nominal diameter (mm) 45 Millimeter
Clamping method External clamping	manufacturer product line Hainbuch		

Clamping head SK65 D=46,00mm

Product ID : 10702916
Previous product ID : 900465.4600

Clamping device size SK65	manufacturer product line SPANNTOP nova chuck	Clamping type grooved	Nominal diameter (mm) 46 Millimeter
Clamping method External clamping	manufacturer product line Hainbuch		

Clamping head SK65 D=47,00mm

Product ID : 10596424
Previous product ID : 900465.4700

Clamping device size	manufacturer product line	Clamping type	Nominal diameter (mm)
SK65	SPANNTOP nova chuck	grooved	47 Millimeter
Clamping method	manufacturer product line		
External clamping	Hainbuch		

Clamping head SK65 D=48,00mm

Product ID : 10701027
Previous product ID : 900465.4800

Clamping device size	manufacturer product line	Clamping type	Nominal diameter (mm)
SK65	SPANNTOP nova chuck	grooved	48 Millimeter
Clamping method	manufacturer product line		
External clamping	Hainbuch		

Clamping head SK65 D=49,00mm

Product ID : 10700083
Previous product ID : 900465.4900

Clamping device size	manufacturer product line	Clamping type	Nominal diameter (mm)
SK65	SPANNTOP nova chuck	grooved	49 Millimeter
Clamping method	manufacturer product line		
External clamping	Hainbuch		

Clamping head SK65 D=50,00mm

Product ID : 10430168
Previous product ID : 900465.5000

Clamping device size	manufacturer product line	Clamping type	Nominal diameter (mm)
SK65	SPANNTOP nova chuck	grooved	50 Millimeter
Clamping method	manufacturer product line		
External clamping	Hainbuch		

Clamping head SK65 D=51,00mm

Product ID : 11007896
Previous product ID : 900465.5100

Clamping device size SK65	manufacturer product line SPANNTOP nova chuck	Clamping type grooved	Nominal diameter (mm) 51 Millimeter
Clamping method External clamping	manufacturer product line Hainbuch		

Clamping head SK65 D=52,00mm

Product ID : 10117777
Previous product ID : 900465.5200

Clamping device size SK65	manufacturer product line SPANNTOP nova chuck	Clamping type grooved	Nominal diameter (mm) 52 Millimeter
Clamping method External clamping	manufacturer product line Hainbuch		

Spannkopf SK65 D=26,00mm

Product ID : 10991722
Previous product ID : 900465.2600

Clamping device size SK65	manufacturer product line SPANNTOP nova chuck	Clamping type grooved	Nominal diameter (mm) 26 Millimeter
Clamping method External clamping	manufacturer product line Hainbuch		

HAINBUCH Clamping elements

Clamping head

Product ID : 10471355
Previous product ID : 900465.1850

Clamping device size SK65	manufacturer product line SPANNTOP nova chuck	Clamping type grooved	Nominal diameter (mm) 18.5 Millimeter
Clamping method External clamping	manufacturer product line Hainbuch		

Other accessories

Base element

Product ID : 10489742
Previous product ID : 900452.8001

Socket head screw

Product ID : 11051534
Previous product ID : 410260.0885