Presetting device SK50/INDEX CAPTO C3

Technical data

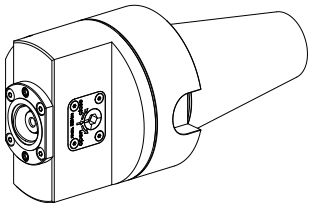

TH accessories category	Adapter for presetting units
Mounting	SK50
Tool mounting	CAPTO C3

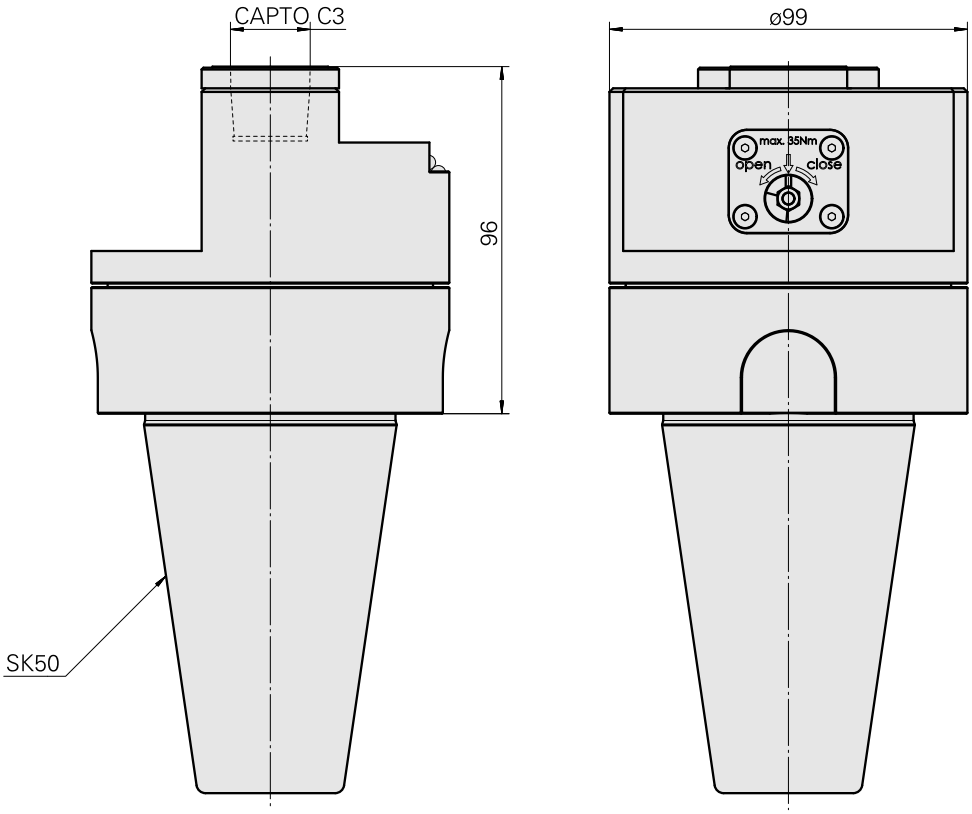

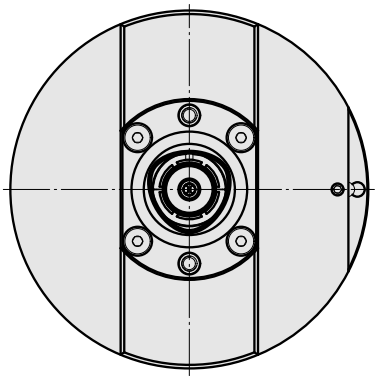

INDEX

Documents

No downloads available for this product